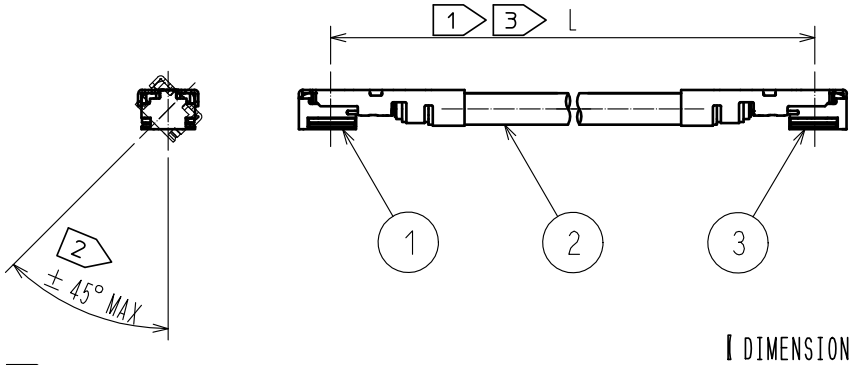

Part No.	Cable color
~088Y1T~	GRAY
~088Y2T~	BLACK
~088Y3T~	WHITE

NOTE 1 We indicate the length of the harness on the last of product name, "L" part.

2 The angle is optional for long length in the case of L>250.

3 Tolerance for [L]

	Length L [mm]	Tolerance [mm]
3	100 ≦ L ≦ 200	± 4 mm
	200 < L ≦ 500	± 8 mm
	500 < L ≦ 1000	±12 mm

【DIMENSIONS OF CONNECTOR】

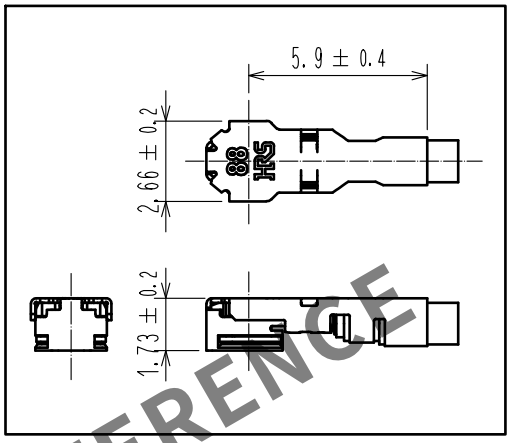

3 ※ For L longer than 1000mm or shorter than 100mm, please contact our representatives.

4. Specifications are subject to change without notice.

【PRECAUTIONS FOR HANDLING】

1. Connector insertion and extraction
   (1)Insert the connector as perpendicularly to the mating surface as possible with aligning the mating axes of both connectors by specialised insertion JIG. Part No.:U.FL(A)-LP-IN.OUT(CL331-2401-0) (fig.1)
   ◆Do not excessively slant the connectors when inserting.
   (2)Connector shall be extracted by specialised extraction JIG. Part No.:U.FL(A)-LP-IN.OUT(CL331-2401-0) (fig.2)
   ◆Never hold the cable when extracting the cable because it damages the connector.

2. Allowable loads on the cable after the connectors are mated.
   The below figures show the maximum allowable loads on the cable. (fig.3)
   ◆Do not apply loads exceeding these values to the cable.

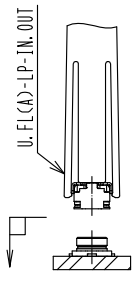

fig.1

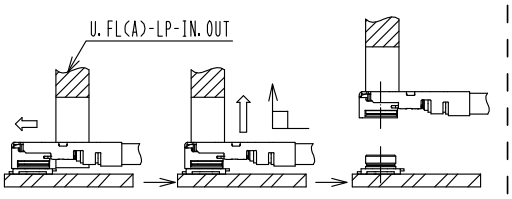

fig.2

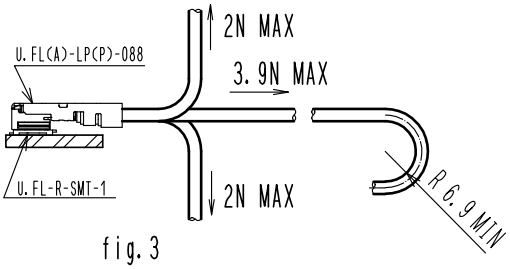

fig.3

No.	Part No.	Code No.	No.	Part No.
1	U.FL(A)-LP(P)-088	CL331-2400-0	2	1.37 Dia. coaxial cable

HALOGEN FREE

UNITS	SCALE		COUNT	DESCRIPTION OF REVISIONS	DESIGNED	CHECKED	DATE
mm	FREE	3	2	DIS-D-00006986	MS. MATSUMOTO	MT. KANEKO	20210323

HIROSE ELECTRIC CO., LTD.

APPROVED	NK. NINOMIYA	20200220
CHECKED	MT. KANEKO	20200220
DESIGNED	MK. INOUE	20200220
DRAWN	MK. INOUE	20200220

DRAWING NO.
PART NO. UFL-2LPA-088Y*T-A-L 1
CODE NO.
3 1/1

FORM HC0011-5-51

HRS DRAWING FOR REFERENCE

May.1.2024 Copyright 2024 HIROSE ELECTRIC CO., LTD. All Rights Reserved.
In case of consideration for using Automotive equipment / device which demand high reliability, kindly contact our sales window correspondents.