Apr.1.2024 Copyright 2024 HIROSE ELECTRIC CO., LTD. All Rights Reserved.
In case of consideration for using Automotive equipment / device which demand high reliability, kindly contact our sales window correspondents.

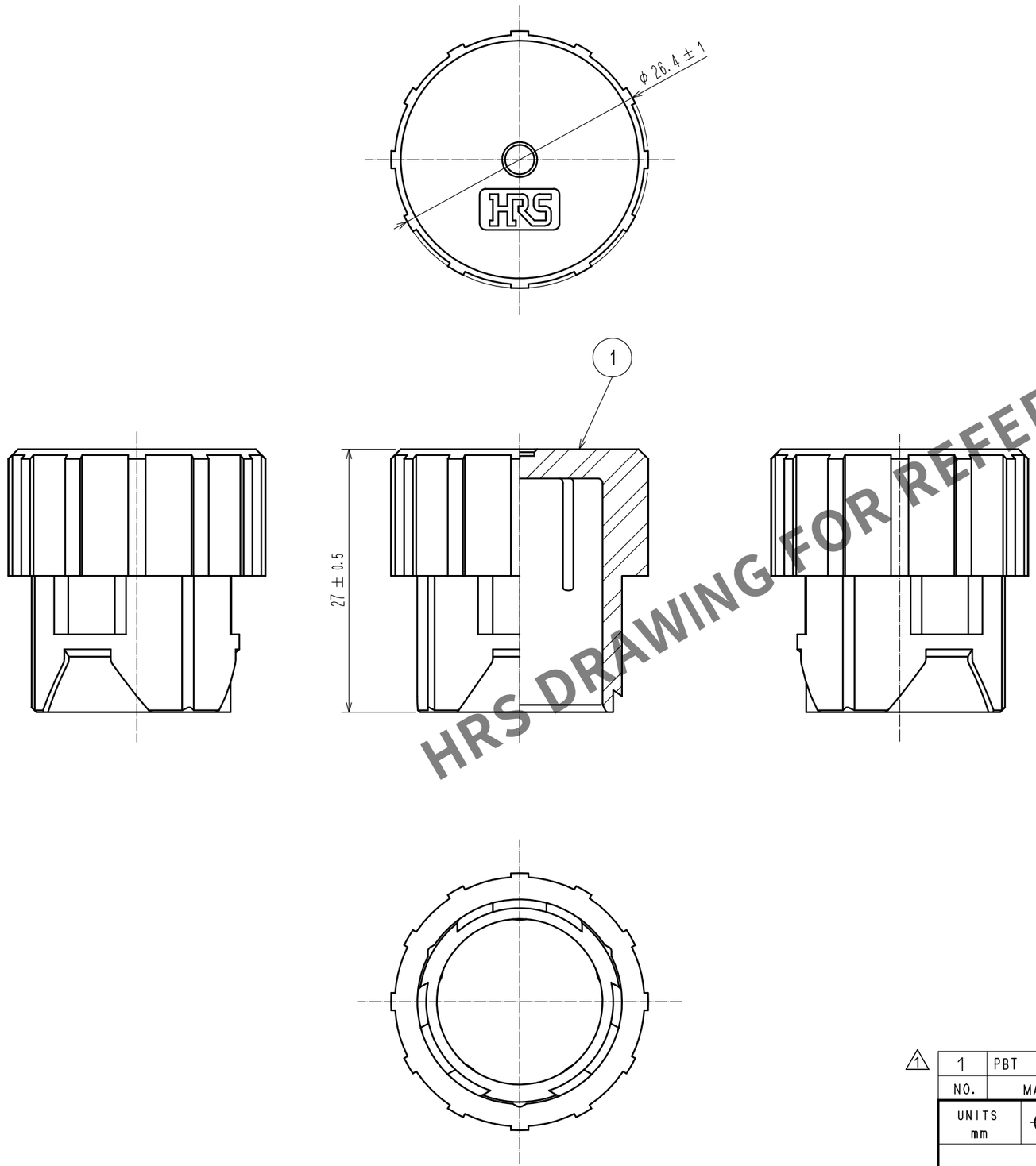

HRS DRAWING FOR REFERENCE

How to attach the cap

Before attachment (1:1)

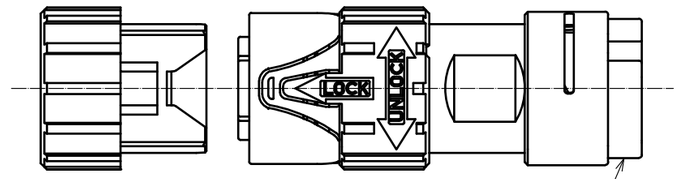

Applicable connectors
HR41A-17WBP*

Attachment completed

Snap cap into plug until click sound is generated.

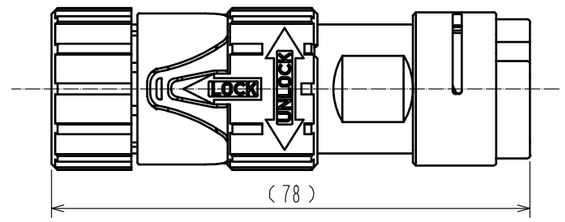

Removal

Rotate the plug sleeve to the direction as shown below with the arrow to unlock and remove the cap.
Rotation angle : approx. 20° to 40°

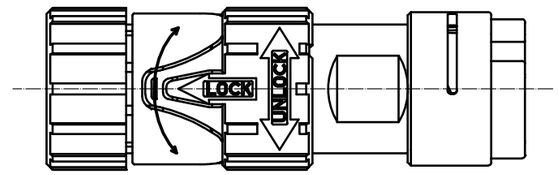

※Over rotation of the cap during unlocking operation locks the cap again.

Oblique drawing

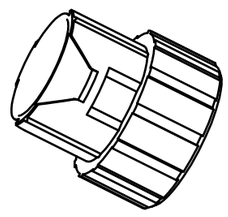

NO.	MATERIAL	FINISH , REMARKS	NO.	MATERIAL	FINISH , REMARKS
1	PBT	(Black)			

UNITS	SCALE	COUNT	DESCRIPTION OF REVISIONS	DESIGNED	CHECKED	DATE
mm	2 : 1	1	DIS-C-00011650	SH. KOYAMA	EJ. KUNII	20220621

HIROSE ELECTRIC CO., LTD.

APPROVED	: TP. KOMATSU	20220301
CHECED	: EJ. KUNII	20220301
DESIGNED	: SH. KOYAMA	20220228
DRAWN	: SH. KOYAMA	20220228

DRAWING NO.	EDC-118455-81-00
PART NO.	HR41A-17WBP-C(81)
CODE NO.	CL0141-0219-1-81

1/1

FORM HC0011-5-7_AN