Apr.1.2024 Copyright 2024 HIROSE ELECTRIC CO., LTD. All Rights Reserved.
In case of consideration for using Automotive equipment / device which demand high reliability, kindly contact our sales window correspondents.

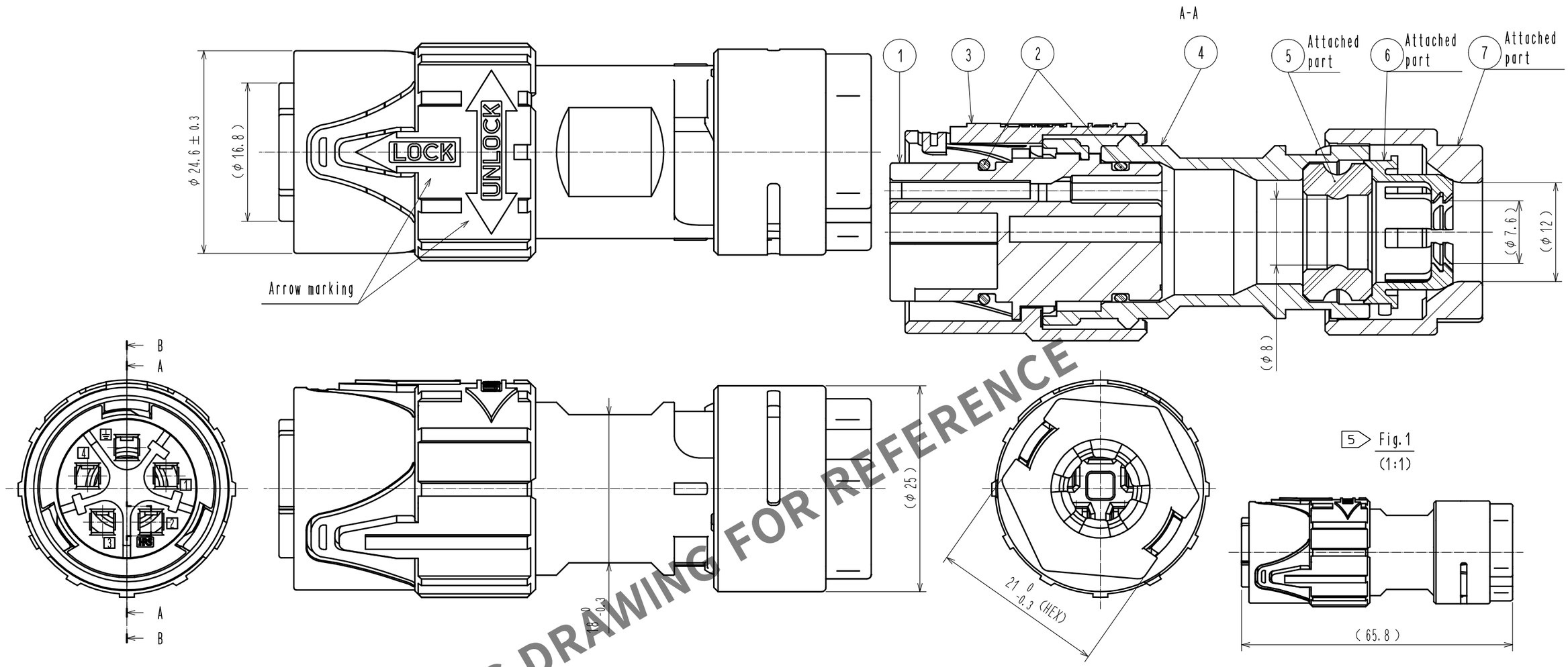

HRS DRAWING FOR REFERENCE

4 Fig.B-B The state applicable contact assembled and 2-step sequential structure

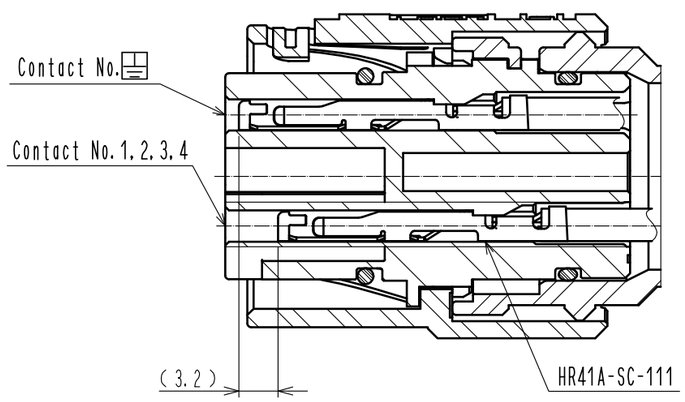

Oblique drawing
(1:1)

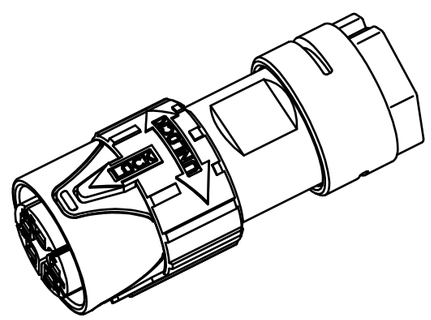

Notes
1 Applicable crimping contact:HR41A-SC-111 (CL141-0213-5)
2 Applicable crimp contact extraction tool:HR41A-TP (CL150-0405-7)
3 Rotation examples are shown for Ref.No. ①,③,④ and ⑦.
4 Fig.B-B shows the state applicable contact assembled and 2-step sequential structure.
Contact No. ⊞ has functions as ground contact.
5 Fig.1 shows the appearance after assembly.
6 The cable pull and twisting strength and other characteristics may differ, depending on the cable structure. please confirm before the use.
7 The assembly of this product applies to the manual ETAD-C0312.
8 Dropouts and the like may occur, so when mated.
Please do not leave with the mating guide of the opposite side and the arrow marks out of alignment.

△1

NO.	MATERIAL	FINISH , REMARKS	NO.	MATERIAL	FINISH , REMARKS
4	PBT	(Black)			
3	PBT	(Black)	7	PBT	(Black)
2	Silicone rubber	(Red)	6	Polyamide	(Light Gray)
1	Polyamide	(Black)	5	Silicone rubber	(Blue)

UNITS	SCALE		COUNT	DESCRIPTION OF REVISIONS	DESIGNED	CHECKED	DATE
mm	2 : 1	△1	1	DIS-C-00011650	SH. KOYAMA	EJ. KUNII	20220621

HRS HIROSE ELECTRIC CO., LTD.

APPROVED	: TP. KOMATSU	20220301	DRAWING NO.	EDC-118693-81-00
CHECED	: EJ. KUNII	20220301	PART NO.	HR41A-17WBPAD-5SC(81)
DESIGNED	: SH. KOYAMA	20220228	CODE NO.	CL0141-0226-7-81 △1 1/1
DRAWN	: SH. KOYAMA	20220228		