May.1.2024 Copyright 2024 HIROSE ELECTRIC CO., LTD. All Rights Reserved.
In case of consideration for using Automotive equipment / device which demand high reliability, kindly contact our sales window correspondents.

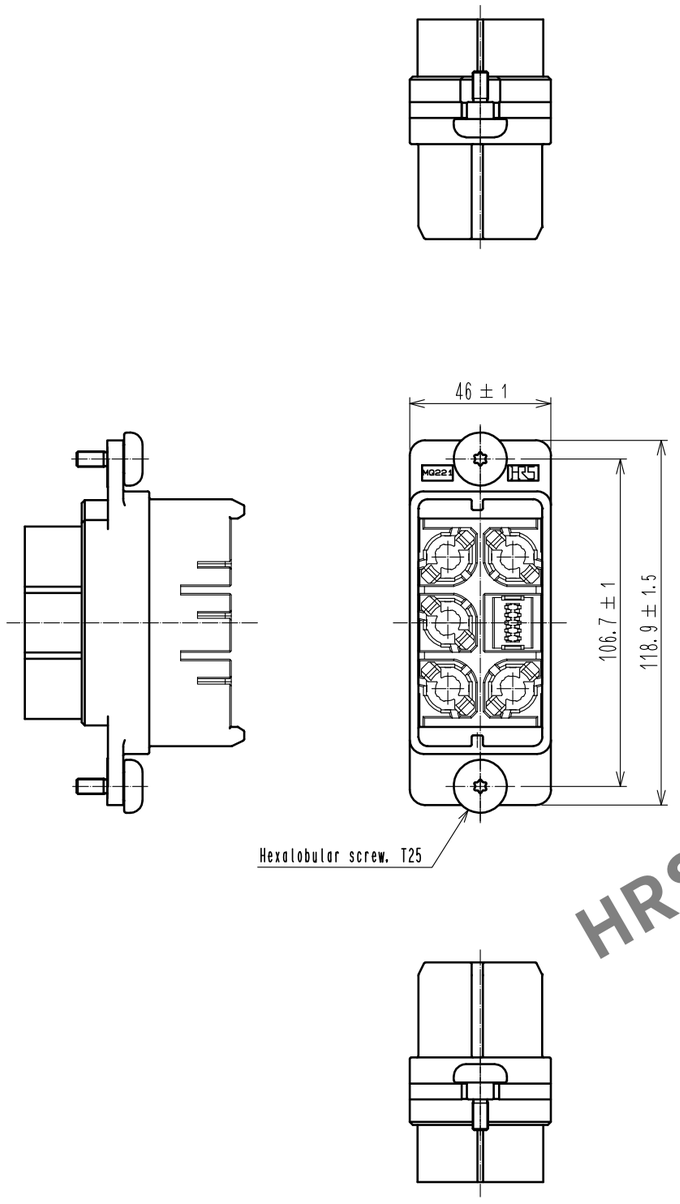

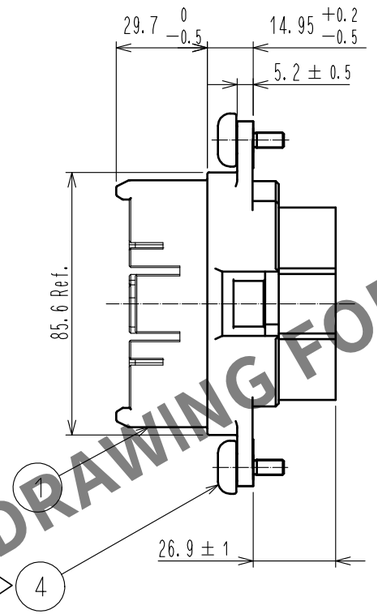

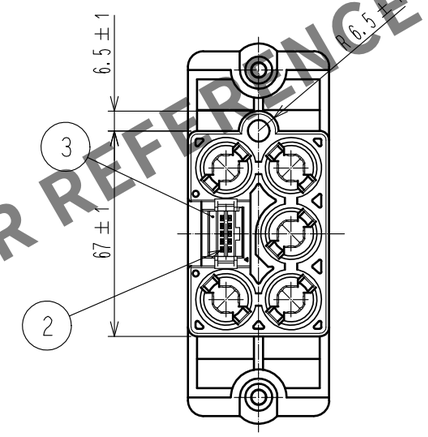

Recommended dimensions between panels (For reference)

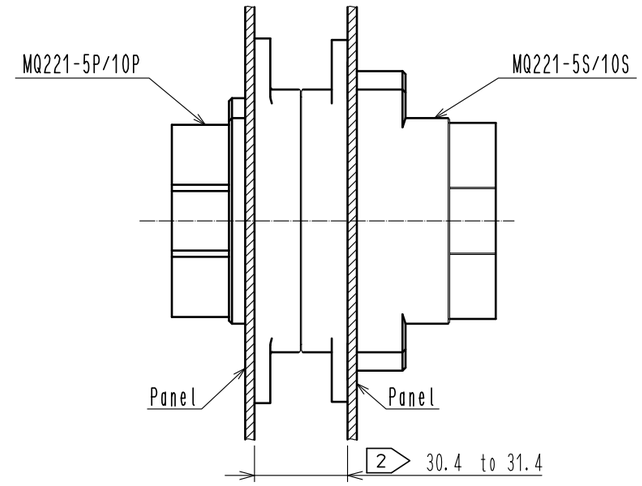

Planel Cutout

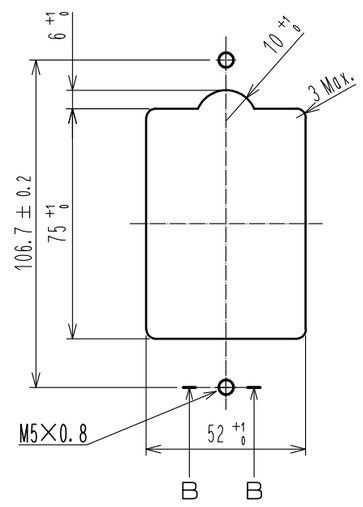

1 4 Attached Part

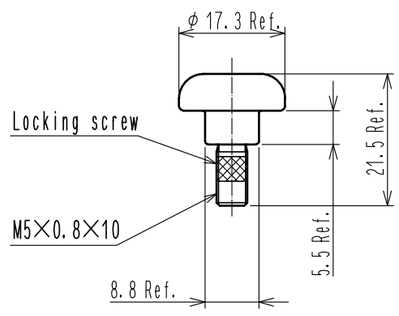

B−B (1 : 1)

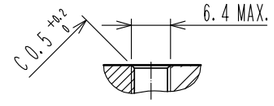

Note 1 The recommended screw tightening torque is 3 N・m.
2 The recommended dimensions between panels are from 30.4 to 31.4.
3 This product shall be mated with MQ221-5S/10S(CL0206-2564-0-00) without problem on the performance.
4 Applicable signal contact unit: HIF3BMQ-10D-2.54C(CL0610-0015-0-00)
HIF3MAW-10D-2.54R(CL0610-3002-9-00)
△1 5 Applicable crimping power contact: EM52M-PC2-132(05) (CL0138-0006-0-05)(38mm² contact)
EM52M-PC-112(05) (CL0138-0012-0-05)(22mm² contact)
EM52M-PC-142(05) (CL0138-0087-0-05)(8mm² contact)
6 This product has a floating structure that float up to 2mm from the center of the mated position.

NO.	MATERIAL	FINISH . REMARKS	NO.	MATERIAL	FINISH . REMARKS
2	Phosphor Bronze	Contact Plating:Gold 0.2μm min. Under Plating:Nickel 0.5μm min.	4	Steel	Over Plating:Nickel 2μm min.
1	PBT	Black. UL94V-0	3	PBT	Black. UL94V-0

UNITS	SCALE		COUNT	DESCRIPTION OF REVISIONS	DESIGNED	CHECKED	DATE
mm	1 : 2	△1	1	DIS-E-00008194	MO. SHIMOYAMA	KG. OKITA	20220112

HRS HIROSE ELECTRIC CO., LTD.

APPROVED	: RI. TAKAYASU	20171020	DRAWING NO.	EDC-129339-00-01
CHECKED	: NM. NISHIMATSU	20171020	PART NO.	MQ221-5P/10P
DESIGNED	: P. EKSOURIYA	20171020	CODE NO.	CL0206-2563-0-00 △1 1/1
DRAWN	: P. EKSOURIYA	20171020		

HRS DRAWING FOR REFERENCE