May.1.2024 Copyright 2024 HIROSE ELECTRIC CO., LTD. All Rights Reserved.
In case of consideration for using Automotive equipment / device which demand high reliability, kindly contact our sales window correspondents.

	COUNT	DESCRIPTION OF REVISIONS	BY	CHKD	DATE		COUNT	DESCRIPTION OF REVISIONS	BY	CHKD	DATE
1	2	RE-J-01958	K.HIDA	K.K	02.11.25						. .
					. .						. .
					. .						. .

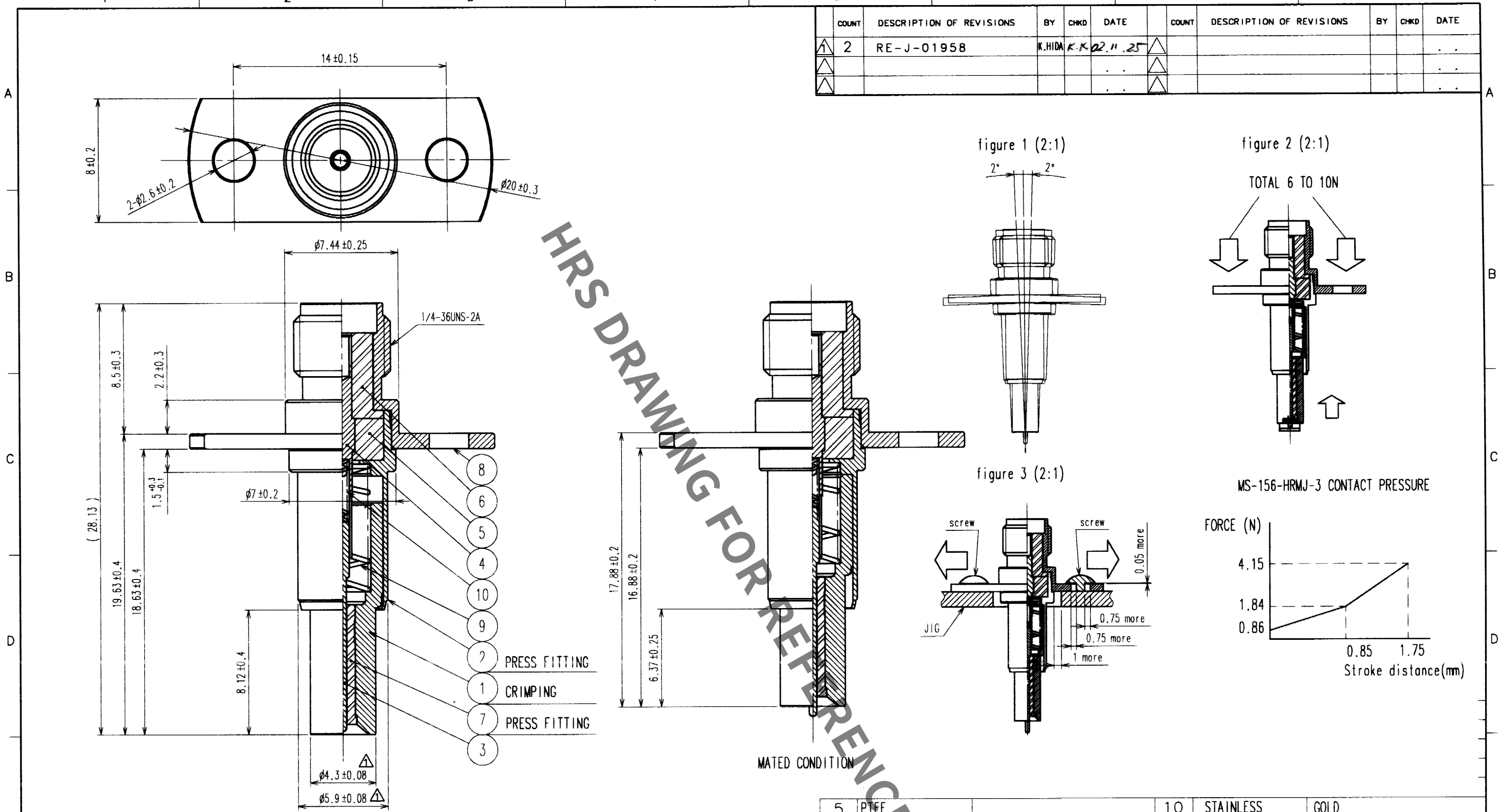

HRS DRAWING FOR REFERENCE

NO.	MATERIAL	FINISH, REMARKS	NO.	MATERIAL	FINISH, REMARKS
5	PTFE		10	STAINLESS	GOLD
4	BERYLLIUM COPPER	GOLD	9	STAINLESS	
3	BERYLLIUM COPPER	GOLD	8	STAINLESS	PASSIVATE
2	BERYLLIUM COPPER	GOLD	7	PTFE	
1	BERYLLIUM COPPER	GOLD	6	PTFE	

NOTE 1.This adaptor must be pushed on the receptacle(MS-156) with 6 to 10N.(refer to figure 2)
2.Mating angle must be less than ±2 degree.(refer to figure 1)
3.This product should not be fixed completely so that it keep space to align for connection
If your jig have alignment structure,it is not needed.
4.Recommended setting configuration is shown in figure 3.

CODE NO.(OLD)	DRAWN	DESIGNED	CHECKED	APPROVED	RELEASED
	K.HIDA '02.11.1	K.HIDA '02.11.1	K.KAWAMURA '02.11.5	Y.MIYAKE '02.11.5	. .

SCALE 4 : 1
UNITS mm

DRAWING NO. EDC3-180317

PART NO. MS-156-HRMJ-6

HRS HIROSE ELECTRIC CO., LTD

CODE NO. CL358-0181-9

1/1

FORM NO.229

TO
RFD