May.1.2024 Copyright 2024 HIROSE ELECTRIC CO., LTD. All Rights Reserved.
In case of consideration for using Automotive equipment / device which demand high reliability, kindly contact our sales window correspondents.

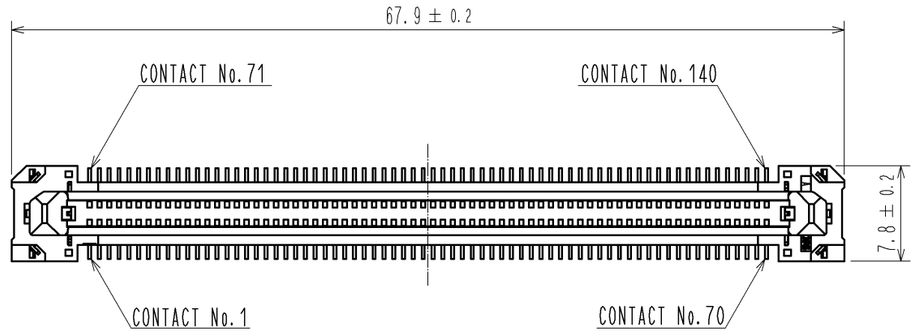

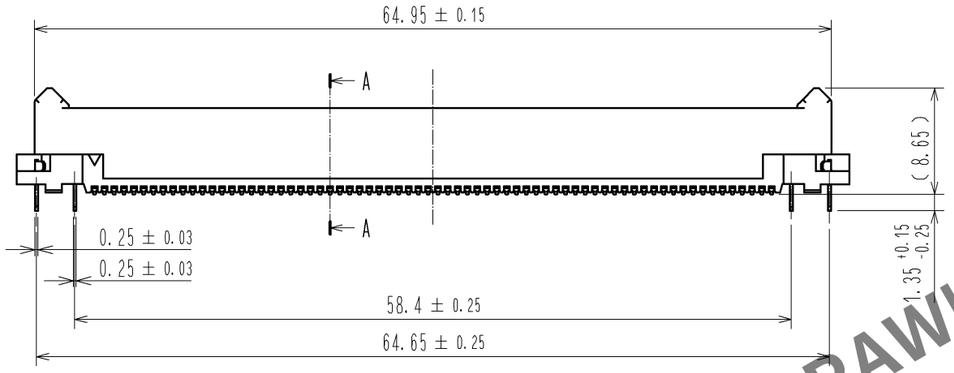

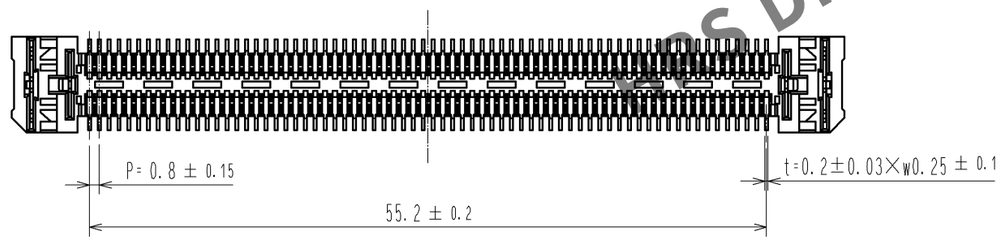

A-A(5:1)

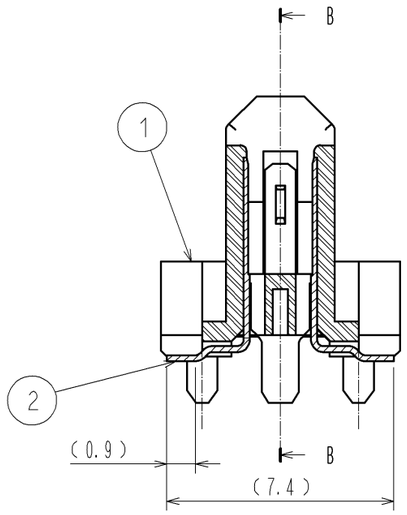

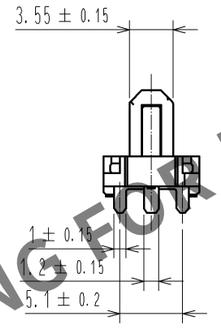

B-B(5:1)

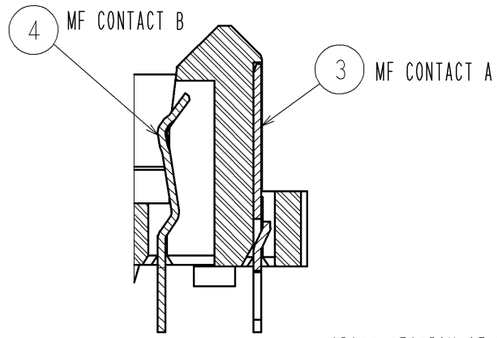

CROSS SECTION OF MATING(5:1)

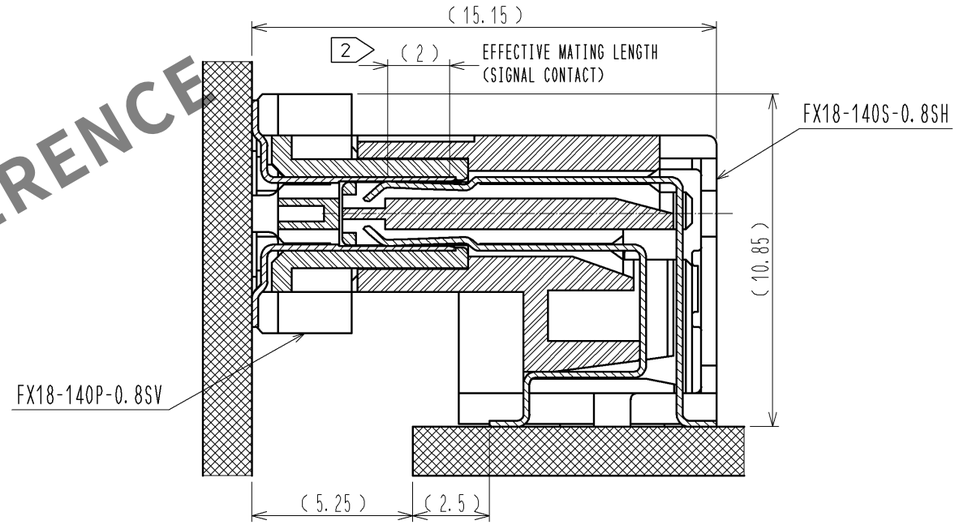

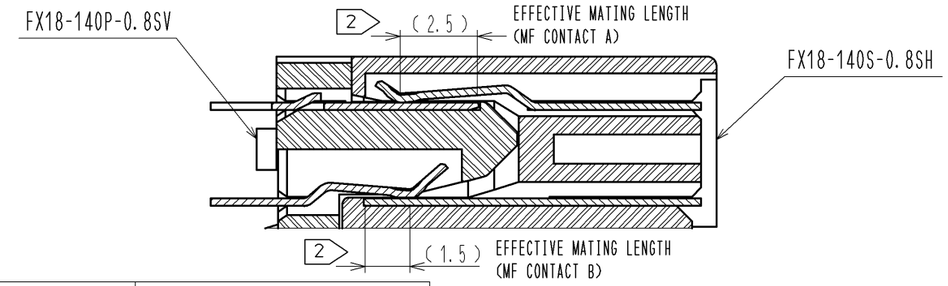

HRS DRAWING FOR REFERENCE

NOTE 1 LEAD CO—PLANARITY IS 0.1mm MAX.
2 CONTACTS ARE 3 STEPS SEQUENTIAL. (MF CONTACT A=>SIGNAL CONTACT=>MF CONTACT B)
WHEN USING THIS SEQUENTIAL STRUCTURE, PLEASE AVOID ANGLED INSERTION.
3 MF CONTACT A AND MF CONTACT B CAN BE USED AS POWER SUPPLY CONTACT. (3A/PIN MAX)
4 IT SHOWS THE VACUUM PICKUP AREA.(SEE PAGE 2)
REMOVE THE MYLAR TAPE BEFORE MATING CONNECTORS.
5 THIS IS PACKAGED IN TRAY.(40pcs/TRAY)
6 BLEMISH AND HIT MARK CAN BE OCCURED THROUGH OUT THE MANUFACTURING PROCESS WHICH DOESN' T AFFECT QUALITY LEVEL.
7 THE DIMENSIONS IN PARENTHESES ARE FOR REFERENCES.

NO.	MATERIAL	FINISH , REMARKS	NO.	MATERIAL	FINISH , REMARKS
3	PHOSPHOR BRONZE	CONTACT AREA:GOLD 0.1μm LEAD AREA:TIN-PLATING 1μm UNDER PLATING:NICKEL 1.3μm	6	POLYIMIDE	
2	PHOSPHOR BRONZE	CONTACT AREA:GOLD 0.1μm LEAD AREA:GOLD 0.03μm UNDER PLATING:NICKEL 1.3μm	5	POLYSTYRENE	
			4	PHOSPHOR BRONZE	CONTACT AREA:GOLD 0.1μm LEAD AREA:TIN-PLATING 1μm UNDER PLATING:NICKEL 1.3μm
1	POLYAMIDE	BLACK UL94V-0			

UNITS mm	SCALE 2 : 1	COUNT	DESCRIPTION OF REVISIONS	DESIGNED	CHECKED	DATE

HIROSE ELECTRIC CO., LTD.

APPROVED	HS. OKAWA	12.01.25	DRAWING NO.	EDC3-159565-00
CHECKED	KI. HIROKAWA	12.01.25	PART NO.	FX18-140P-0.8SV
DESIGNED	TH. SANO	12.01.25	CODE NO.	CL579-0021-0-00
DRAWN	TH. SANO	12.01.25		1/2

FORM HC0011-5-7

May.1.2024 Copyright 2024 HIROSE ELECTRIC CO., LTD. All Rights Reserved.
In case of consideration for using Automotive equipment / device which demand high reliability, kindly contact our sales window correspondents.

RECOMMENDED LAND PATTERN DIMENSION OF PCB(2:1)
(PCB THICKNESS:t=1.6mm METAL MASK THICKNESS:t=0.12mm)

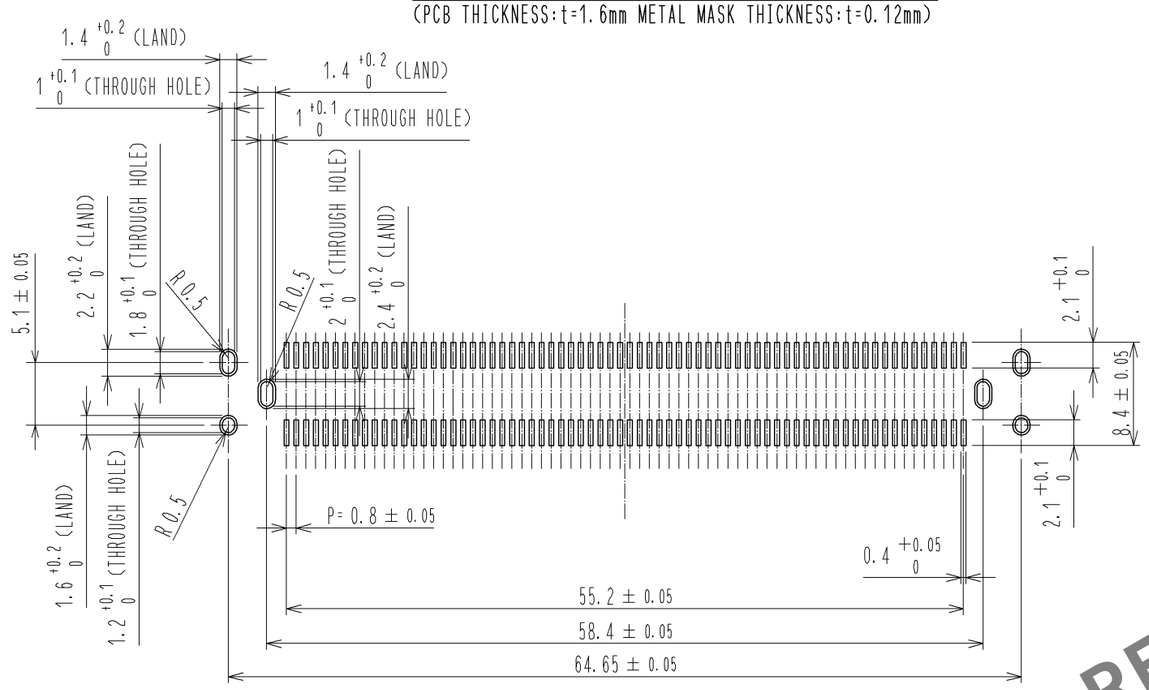

8 CONFIGURATION OF MF CONTACT A

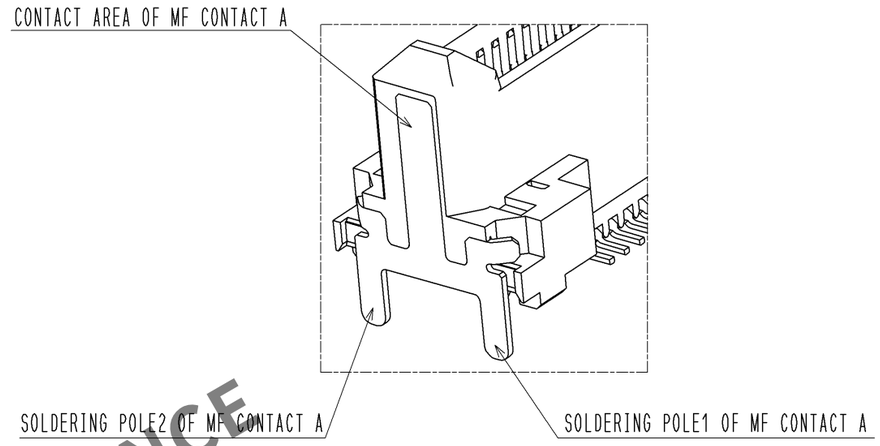

NOTE 8 SOLDERING LEAD OF MF CONTACT A SPLITS INTO TWO POLES.
BE SURE TO CONNECT TO THE SAME CIRCUIT.

5 DRAWING FOR PACKING(1:2)

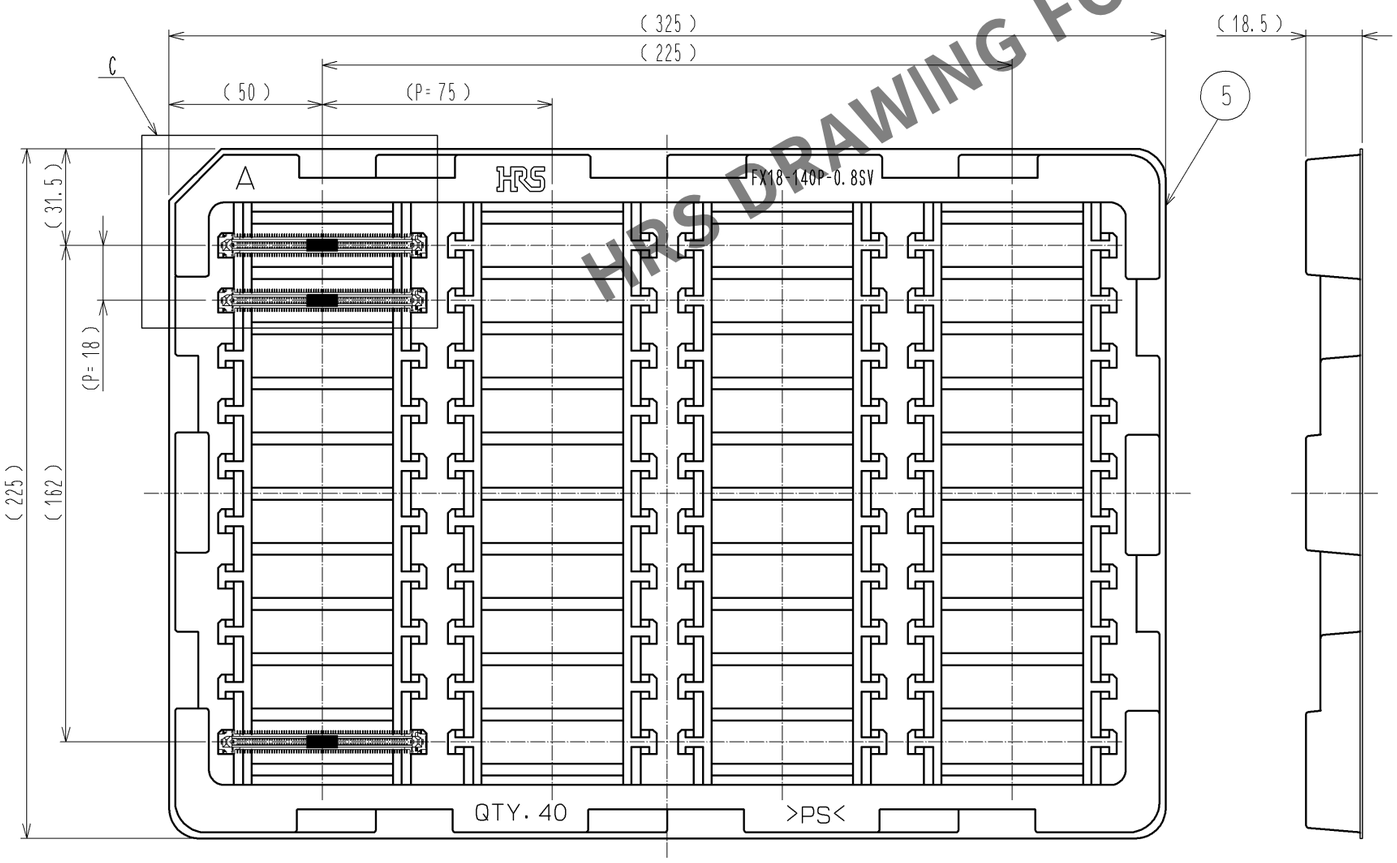

C(1:1)

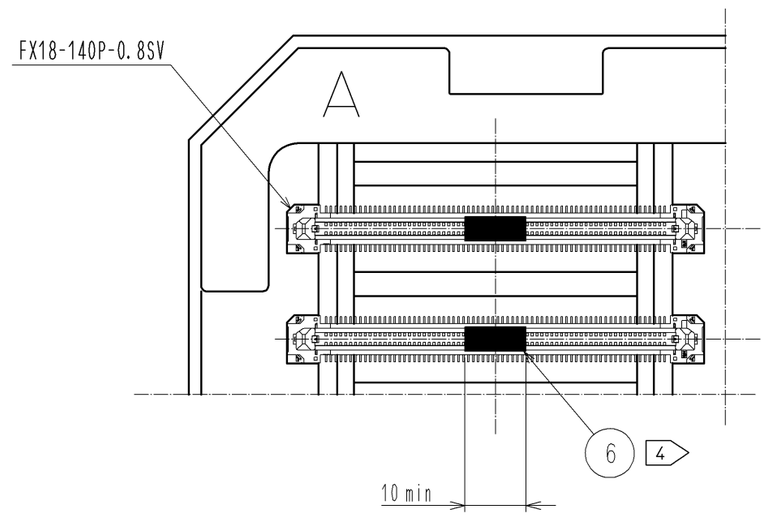

HRS DRAWING FOR REFERENCE

HRS	DRAWING NO.	EDC3-159565-00
	PART NO.	FX18-140P-0.8SV
	CODE NO.	CL579-0021-0-00 △ 2/2