May.1.2024 Copyright 2024 HIROSE ELECTRIC CO., LTD. All Rights Reserved.
In case of consideration for using Automotive equipment / device which demand high reliability, kindly contact our sales window correspondents.

ELV. RoHS COMPLIANT

5 DELETE PAGES 2-5

3 PACKING STYLE

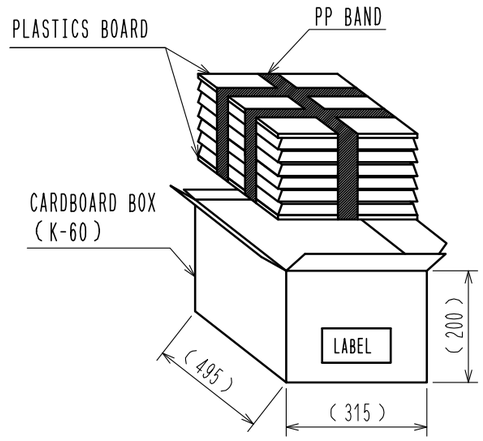

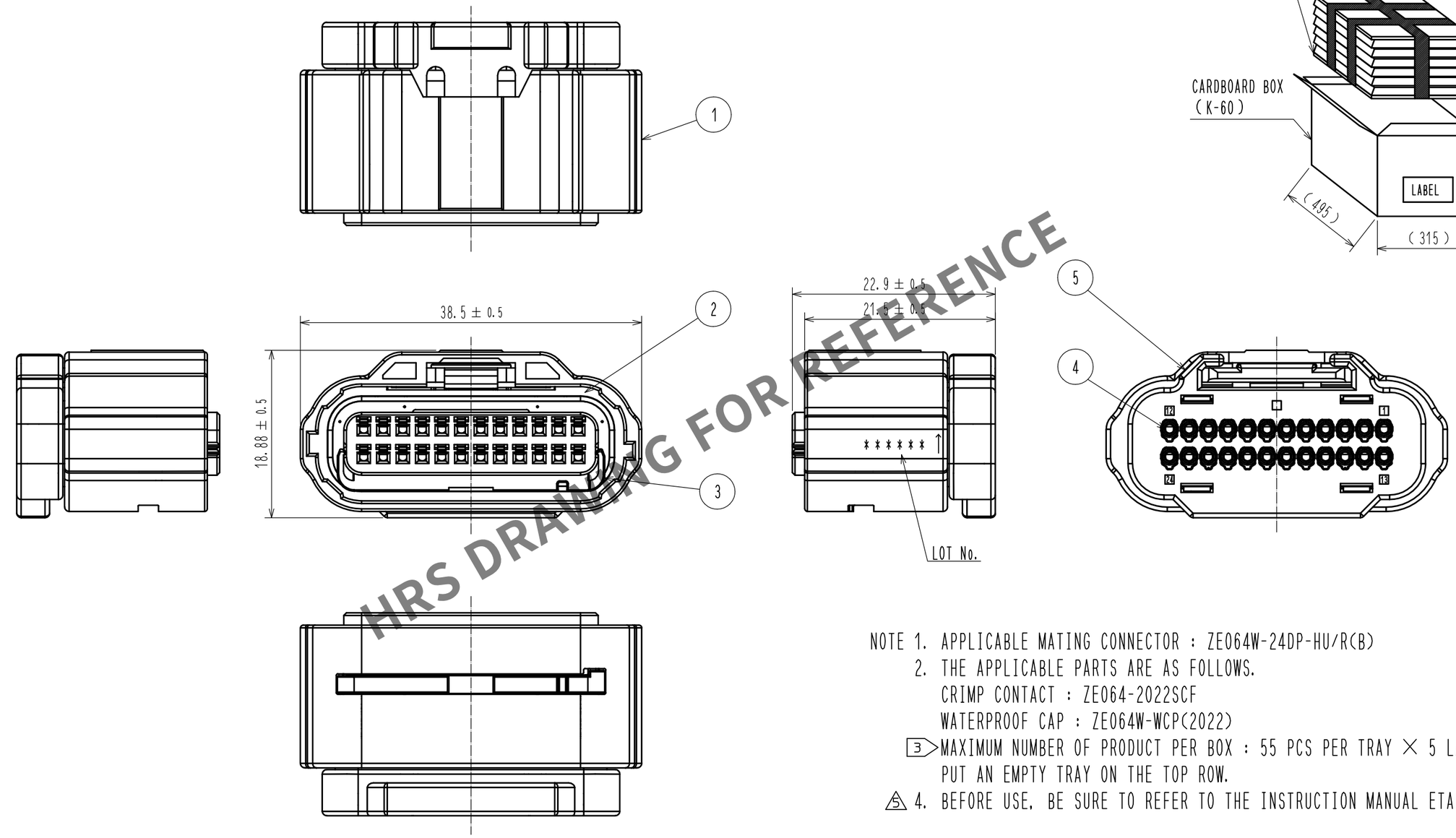

HRS DRAWING FOR REFERENCE

NOTE 1. APPLICABLE MATING CONNECTOR : ZE064W-24DP-HU/R(B)
2. THE APPLICABLE PARTS ARE AS FOLLOWS.
CRIMP CONTACT : ZE064-2022SCF
WATERPROOF CAP : ZE064W-WCP(2022)
3 MAXIMUM NUMBER OF PRODUCT PER BOX : 55 PCS PER TRAY × 5 LAYERS = 275 PCS.
PUT AN EMPTY TRAY ON THE TOP ROW.
5 4. BEFORE USE, BE SURE TO REFER TO THE INSTRUCTION MANUAL ETAD-T0644-00.

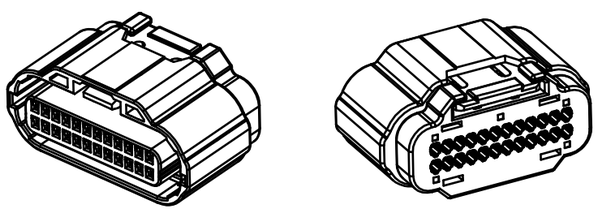

NO.	MATERIAL	FINISH , REMARKS	NO.	MATERIAL	FINISH , REMARKS
3	PA	BEIGE, UL94 V-0			
2	SILICONE	RED, OIL BLEED 5	5	PBT	GRAY, UL94 V-0
1	PA	GRAY, UL94 V-0	4	SILICONE	RED, OIL BLEED 5

UNITS	SCALE		COUNT	DESCRIPTION OF REVISIONS	DESIGNED	CHECKED	DATE
mm	2 : 1	5	4	DIS-T-00016742	TY. MOGI	AH. EDASHIGE	20230124

HRS HIROSE ELECTRIC CO., LTD.

APPROVED	: HK. UMEHARA	20180613	DRAWING NO.	EDC-374260-00-00
CHECKED	: HH. TSUKUMO	20180613	PART NO.	ZE064W-24DS-HU/R(B)
DESIGNED	: AS. SHIBAHARA	20180613	CODE NO.	CL0753-2006-0-00
DRAWN	: GYEONGMIN LEE	20180613		5 1/1