	COUNT	DESCRIPTION OF REVISIONS	BY	CHKD	DATE		COUNT	DESCRIPTION OF REVISIONS	BY	CHKD	DATE
△					. .	△					. .
△						△					. .
△						△					. .

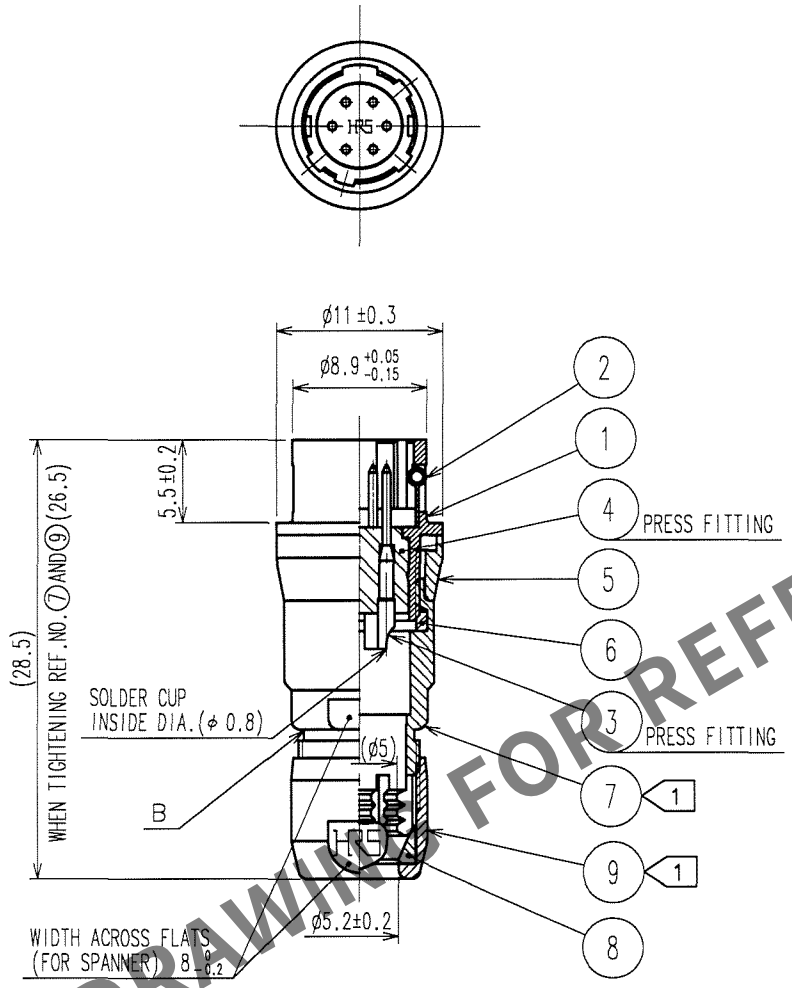

HRS DRAWING FOR REFERENCE

NOTES 1 THE RECOMMENDED CLAMP TORQUE, REF.NO.⑦ AND⑨: 1.5 N·m.
REF.NO.⑨SHALL BE TIGHTENED BY TORQUE AFTER CLAMPED UNTIL IT TOUCHES THE SURFACE B.
2 ONE EXAMPLE OF THE ROTATION OF REF.NO.①,⑦ AND⑨ARE SHOWN.

NO.	MATERIAL	FINISH, REMARKS	NO.	MATERIAL	FINISH, REMARKS
4	POLYAMIDE	(BLUE)	9	BRASS	MATTE FINISH NICKEL PLATED
3	BRASS	GOLD PLATING 0.2μm min. NICKEL UNDER PLATING 2μm min.	8	POLYAMIDE	
			7	BRASS	MATTE FINISH NICKEL PLATED
2	STAINLESS STEEL		6	POLYAMIDE	
1	ZINC ALLOY	MATTE FINISH NICKEL PLATED	5	BRASS	MATTE FINISH NICKEL PLATED

CODE NO.(OLD)	DRAWN	DESIGNED	CHECKED	APPROVED	RELEASED
CL	D. Matsuno '05·11·19	D. Matsuno '05·11·19	E. Kumii '05·11·22	M. Sato 05·11·24	

SCALE 2 : 1	DRAWING NO. EDC4-007765-73	PART NO. HR10-7J-6P(73)
UNITS mm	HRS HIROSE ELECTRIC CO.,LTD.	CODE NO. CL110-0030-7-73

1/1

FORM NO.228

TO
R

Apr.1.2024 Copyright 2024 HIROSE ELECTRIC CO., LTD. All Rights Reserved.
In case of consideration for using Automotive equipment / device which demand high reliability, kindly contact our sales window correspondents.