Apr.1.2024 Copyright 2024 HIROSE ELECTRIC CO., LTD. All Rights Reserved.
In case of consideration for using Automotive equipment / device which demand high reliability, kindly contact our sales window correspondents.

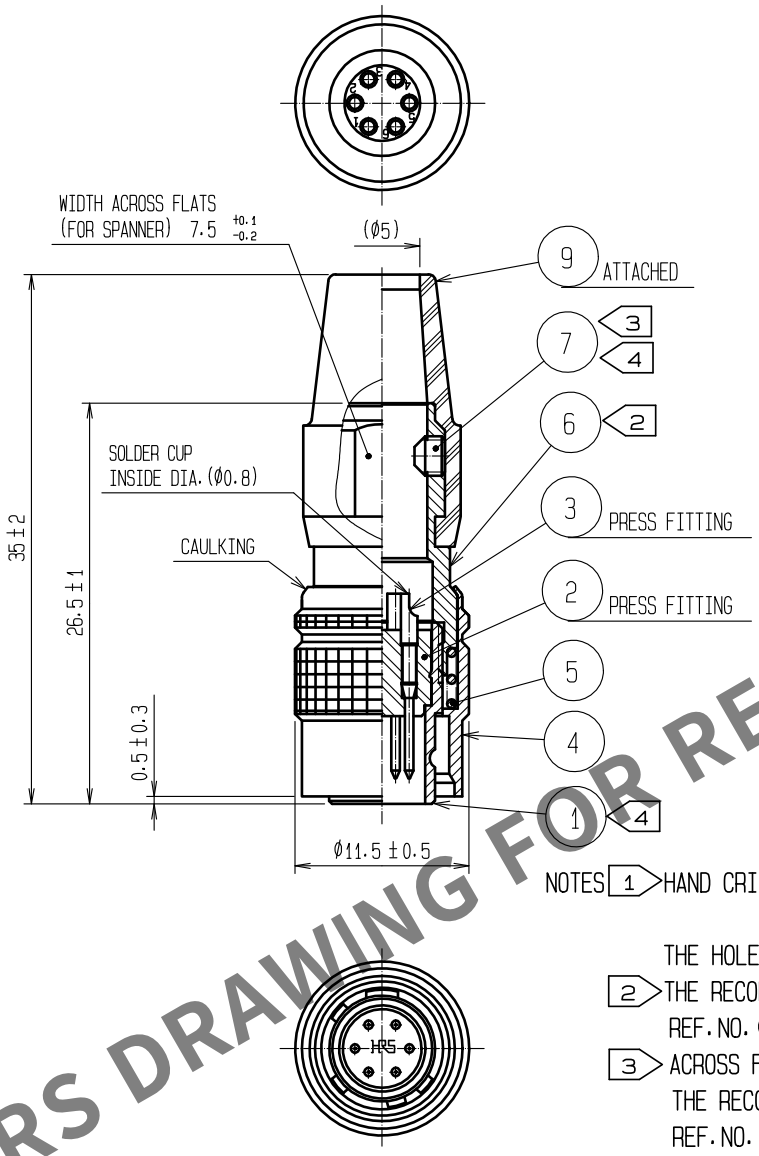

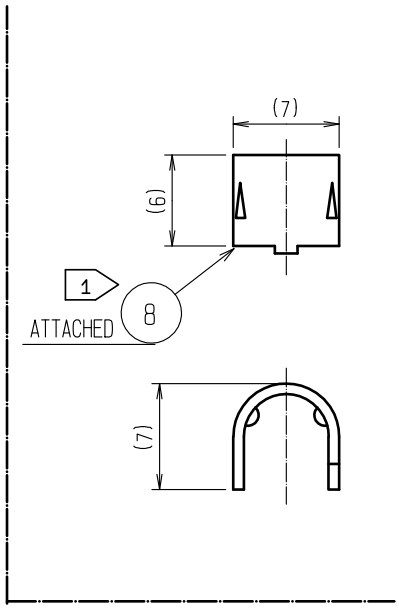

NOTES 1 HAND CRIMPING TOOL. REF. NO. ⑧:
HR10A-TC-02(CL150-0041-2)
THE HOLE DIAMETER FOR CRIMPING:Ø5.3

2 THE RECOMMENDED CLAMP TORQUE,
REF. NO. ⑥: 1.5 TO 2 N·m.

3 ACROSS FLATS HEXAGON HEAD OF REF. NO. ⑦: 1.27
THE RECOMMENDED CLAMP TORQUE,
REF. NO. ⑦: 0.3 TO 0.4N·m.

△2 4 LOCTITE 263, HENKEL JAPAN OR EQUIVALENT APPLIES
TO PREVENT REF. NO. ①AND⑦FROM LOOSENING.

5 ONE EXAMPLE OF THE ROTATION OF REF. NO. ⑥TO
REF. NO. ①IS SHOWN.

△2 6 THE ASSEMBLY THIS PRODUCT APPLIES TO
THE MANUAL ETAD-C0354-00.

HRS DRAWING FOR REFERENCE

NO.	MATERIAL	FINISH . REMARKS	NO.	MATERIAL	FINISH . REMARKS
5	STEEL	NICKEL PLATING			
4	BRASS	MATTE FINISH NICKEL PLATED	9	CR	(BLACK)
3	BRASS	SILVER PLATING 2μm min.	8	BRASS	
2	POLYAMIDE	(BLACK) UL94V-0	7	STEEL	NICKEL PLATING HEXAGON SOCKET SET SCREW M2.6X0.45X2
1	ZINC ALLOY	MATTE FINISH NICKEL PLATED	6	BRASS	NICKEL PLATING

UNITS	SCALE		COUNT	DESCRIPTION OF REVISIONS	DESIGNED	CHECKED	DATE
mm	2 : 1	△2	2	DIS-C-00016958	HT. ZENBA	EJ. KUNII	20240227

HIROSE ELECTRIC CO., LTD.

APPROVED	: MO. SATOH	20051020	DRAWING NO.	EDC4-020536-73
CHECKED	: EJ. KUNII	20051020	PART NO.	HR10A-7P-6P(73)
DESIGNED	: DS. MATSUNE	20051019	CODE NO.	CL0110-0303-8-73 △2 1/1
DRAWN	: DS. MATSUNE	20051019		

FORM HC0011-5-51