Plug Assembly Instructions

Illustration (Operation)

■Assembly product illustration △2

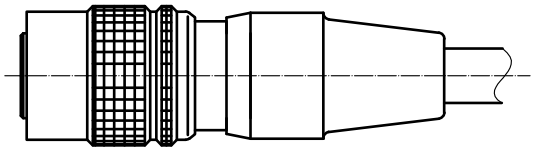

Push Pull Lock Type

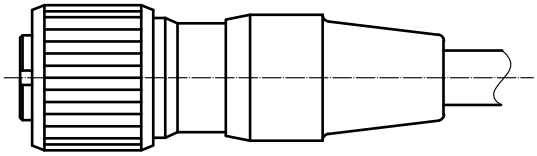

Screw Lock Type

■Name of each part

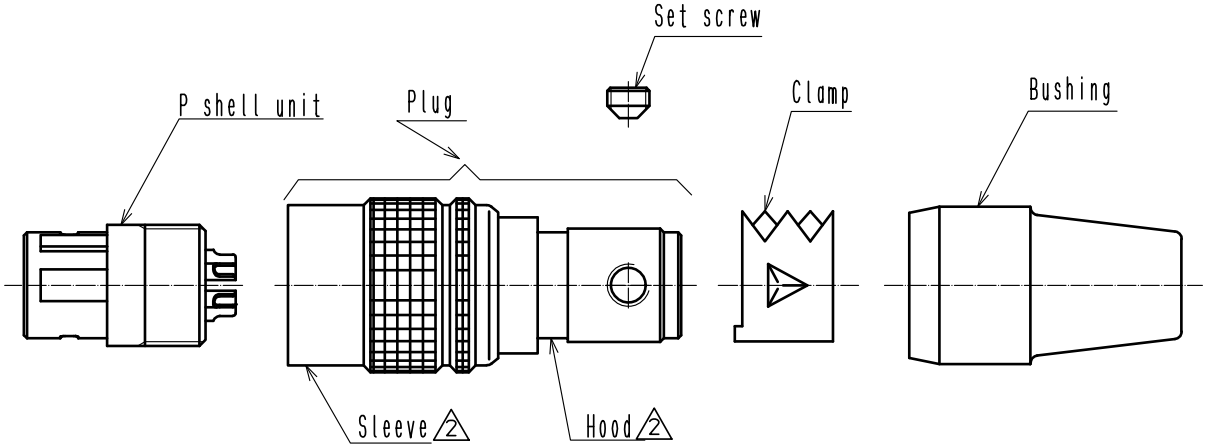

⚠ Caution! △2

① Since there is no dedicated wiring jig for screw lock type connectors, please refer to page 2 for connector disassembly, page 4 for solder wiring, and pages 8 and 9 for connector assembly using a mating partner.

② Do not apply a load that causes the sleeve to tilt against the body while the plug is removed from the P-shell unit. The sleeve may get caught on the body, causing the sleeve to become stuck.

Caution② Examples of defects

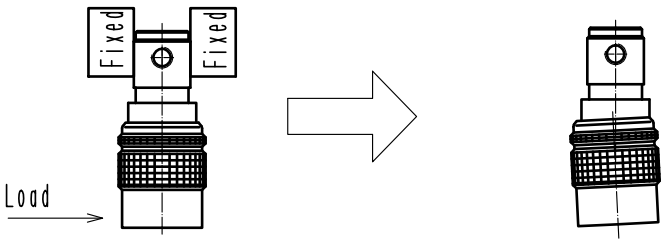

The sleeve gets caught on the body
and the sleeve will not move.

	COUNT	DESCRIPTION OF REVISIONS	DESIGNED	CHECKED	DATE
△2	16	DIS-C-00017468	HT. ZENBA	HY. KOBAYASHI	20240425

TITLE

HR10A Connector
Assembly Procedure

HRS HIROSE ELECTRIC CO., LTD.

APPROVED	YH. YAMADA	20161122
CHECKED	EJ. KUNII	20161122
CHARGED	KN. IKEHARA	20161122
WRITTEN	KN. IKEHARA	20161122

TECHNICAL SPECIFICATION | ETAD-C0354-00 | △2 | 1/9

FORM 213-1

Apr.1.2024 Copyright 2024 HIROSE ELECTRIC CO., LTD. All Rights Reserved.

Illustration (Operation)

1

■Connector disassembly

To remove the plug from the P shell unit, connect the connector to one of the wire connection jigs : HR10-7P-T01 (for 7 size), HR10-10P-T01 (for 10 size), or HR10-13P-T05 (for 13 size) or fix the connector to a receptacle that can be connected to the plug to be disassembled. Then engage a spanner with the spanner engagement portion and turn it counterclockwise to disassemble.

*When using a wire connection jig

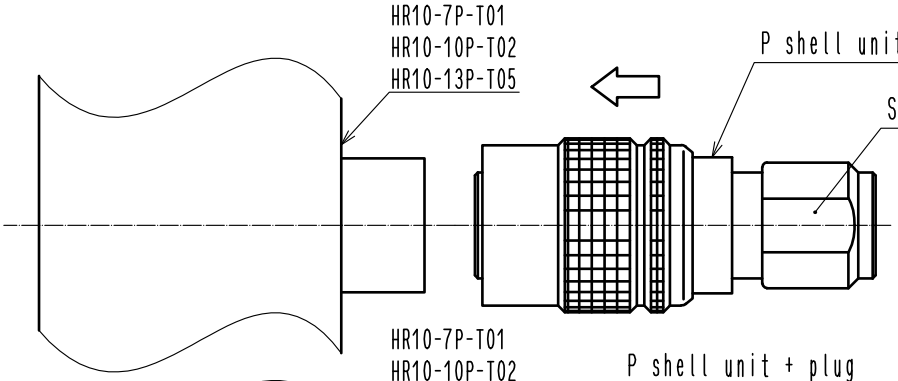

Spanner engagement dimensions	
7size	7.5
10size	9.5
13size	13

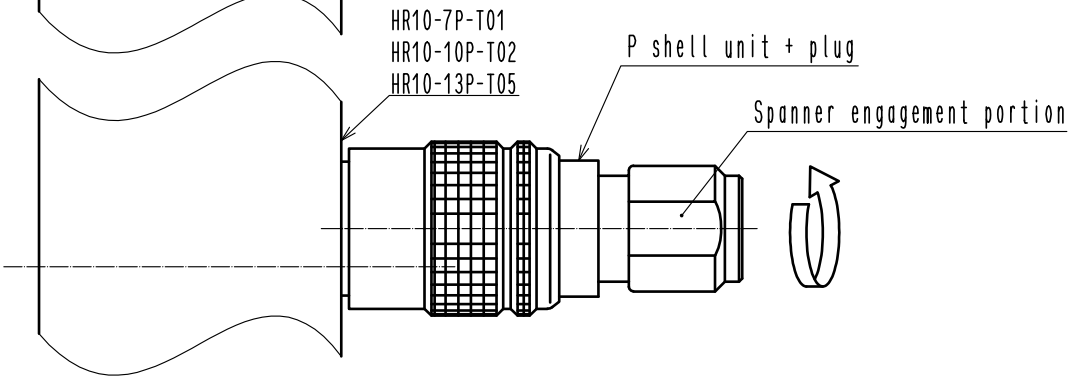

*When using a receptacle

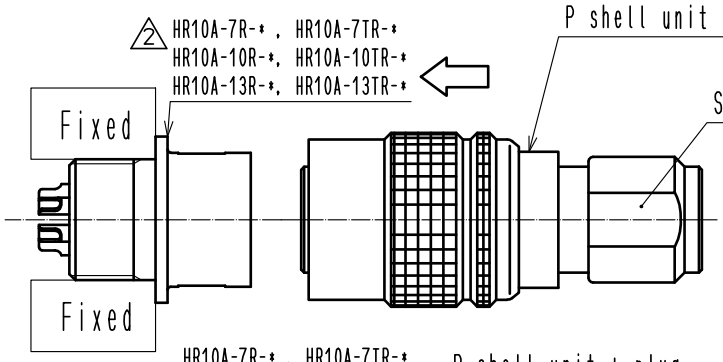

Spanner engagement dimensions	
7size	7.5
10size	9.5
13size	13

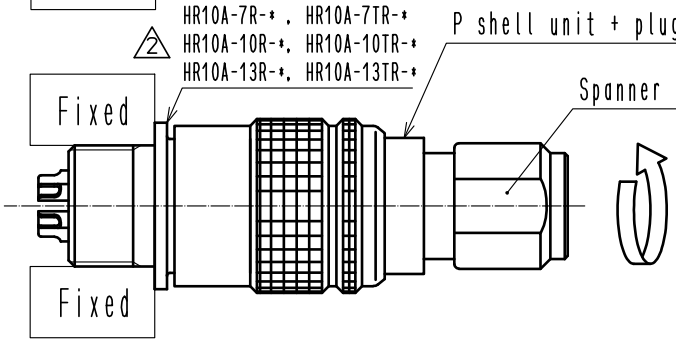

Note: When a receptacle is used for wire connection processing, because it is gripped at the screw part to fix, the screw may be deformed. Therefore, once a receptacle has been used for wire connection processing, we recommend that the receptacle be not used for any purposes other than wire connection processing.

Number/alphabetical letter is given to *.

Apr.1.2024 Copyright 2024 HIROSE ELECTRIC CO., LTD. All Rights Reserved.

Illustration (Operation)

2

■Wire connection preparation

After removing the plug from the P shell unit, before processing the end, pass the cable through the bushing, then through the plug.
(The cable may not be able to pass through some parts after its end has been processed.)

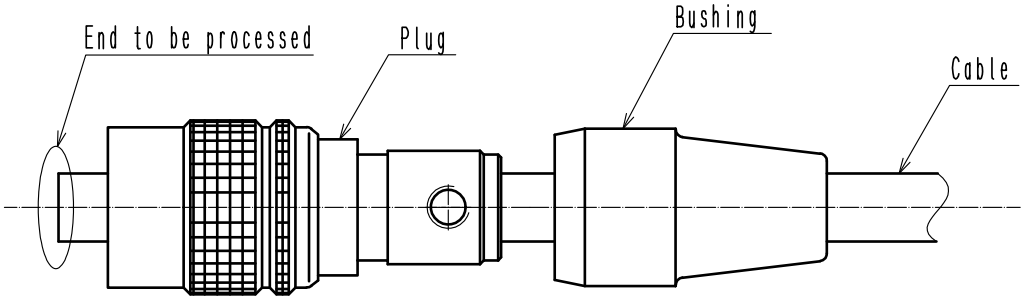

3

■Cable end processing

Process the end to be processed as shown in the table.
Use a cable whose conductor's nominal cross sectional area is 0.129 mm^2(AWG 26) or less in the outer diameter applicable to each size.

Notes!

- Do not damage jacket and/or conductor, otherwise it may cause insulation and/or conductivity failures and/or reduce the strength at the crimped portion.
- Cable property differs depending on cable specifications. Please evaluate under the actual conditions prior to use.

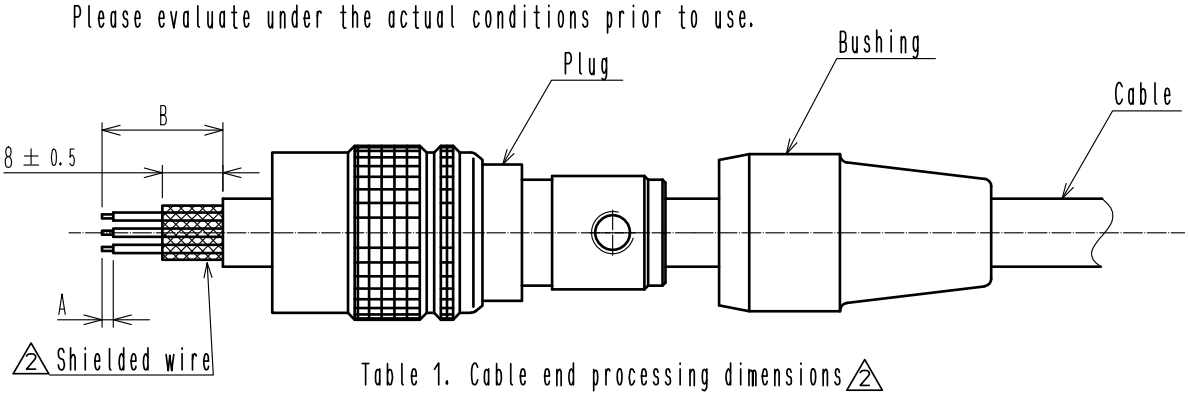

Table 1. Cable end processing dimensions 2

Size	Dimension A	Dimension B	
		Solder type	Crimp type
7 Size	$2^{0}_{-0.5}$	10	15 to 20
10 Size		16	15 to 20
13 Size		26	26

◆Fold back the shield wire 2

⚠ Caution!

- In the case of braided shield, when folding back the shield wire, unravel the braid, straighten it and fold it back.
  If the wire is folded back in a net shape, the shield wire will easily break when the clamp fixture is caulked.

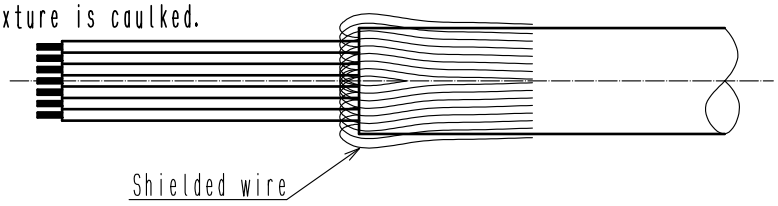

FORM 213-2

Apr.1.2024 Copyright 2024 HIROSE ELECTRIC CO., LTD. All Rights Reserved.

Illustration (Operation)

■Wire connection by solder

Connect the P shell unit to a wire connection jig or receptacle, and then conduct the wire connection.
We recommend that the soldered portion of the contact be covered with insulation tubes or the like to avoid pressure failures.
Incidentally, pass the lead through the tube before soldering.

・When using a wire connection jig

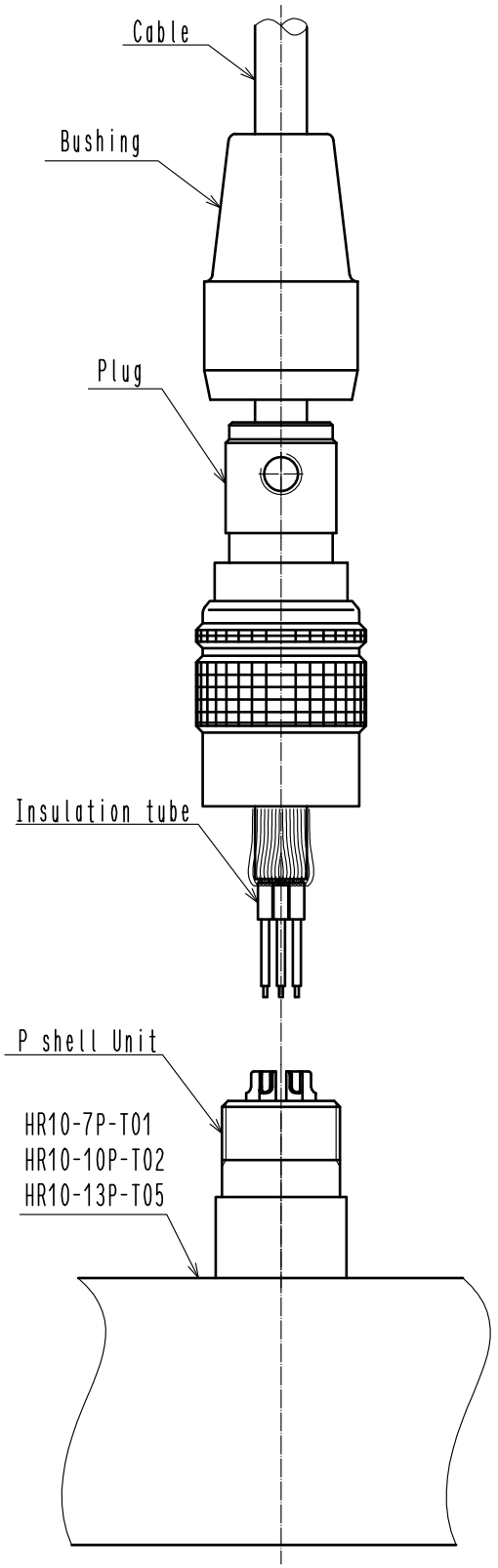

・When using a receptacle

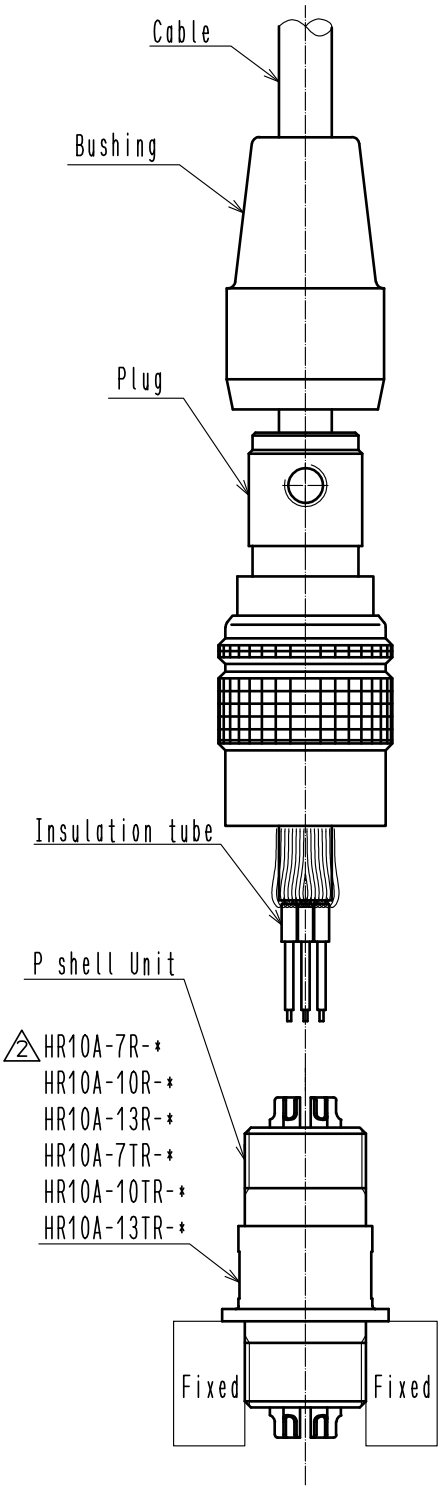

FORM 213-2

Apr.1.2024 Copyright 2024 HIROSE ELECTRIC CO., LTD. All Rights Reserved.

Illustration (Operation)

■Crimp connection ⚠2

Crimp the crimp contact to the lead wire.
C/H and other crimp quality standards shall be in accordance with the Crimp Condition Table.

Applicable tool

Type	Tool name	Product No.
Manual	Manual crimping tool	HT802/HR12-SC-1
Automatic	Automatic crimping tool	CM-105C
	Applicator	AP105-HR12-1

⚠ Caution!

When crimping with a manual tool, the caulking may be hard or the work may be difficult, but be sure to perform crimping.
If crinmping is not performed reliably, electrical connection problems may occur.

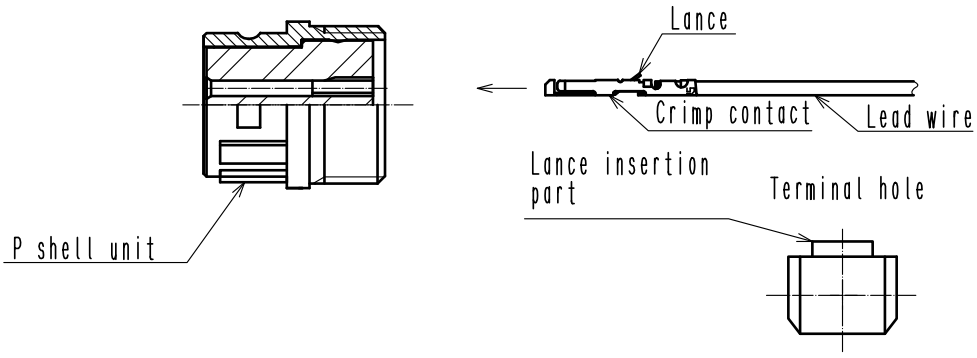

Apply crimping contact to the lead wire After crimping using a tool, insert the crimping contact in the position where the lance of the crimping contact comes to the lance insertion part of the contact hole of the plag.
The lance insertion portion of the plug's terminal hole is shown in the table below when viewed from the direction from which the terminal No. can be read.

4

Compatible products	HR10A-13*-20PC(**)	HR10A-13*-20SC(**)	Other, HR10A Crimp type
Appearance Example	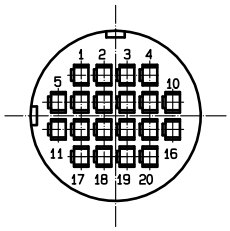	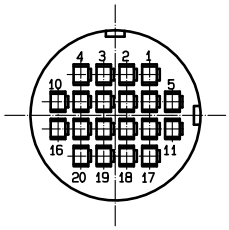	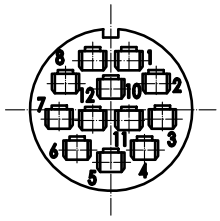
Lance insertion part	Left	Right	Top

After insertion, gently pull the lead wire (about 2 to 3 N) and make sure the contact is secured.

⚠ Caution!

- When inserting the contacts make sure not to deform then.
  Deformed contacts may cause poor contact or disconnection.
- If the contact is not aligned during insertion, it will be damaged.
- If the contact is pushed too much during insertion, the housing may be dameged and the contact may stick out to the mating surface.
- If the cable is soft, it may be difficult to insert the contacts.
  In this case, insert the contacts by holding the cable close to the contacts.
- If the lead wire is pulled 10 N or more after insertion, the contact and housing may be damaged.

Apr.1.2024 Copyright 2024 HIROSE ELECTRIC CO., LTD. All Rights Reserved.

Illustration (Operation)

■Crimp connection ⚠2

How to use the contact extraction jig
If you insert the crimp contact into the wrong terminal hole, use a contact extraction jig to remove the contact from the connector.

Applicable tool

Extractor	Applicable contact
RP6-SC-TP	HR10-PC-*
HR12-SC-TP	HR12-SC-*

How to use

(1)Insert the tip of the contact extraction jig into the jig insertion point of the terminal hole.

・HR10-PC-*+RP6-SC-TP

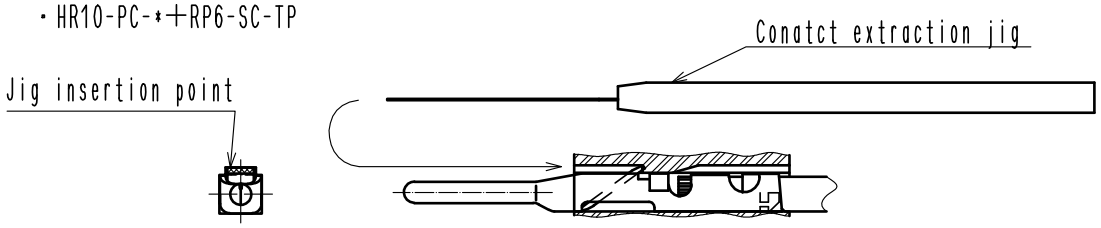

・HR12-SC-*+HR12-SC-TP

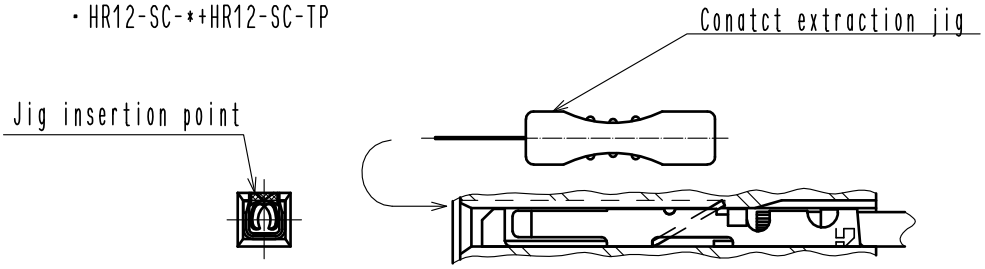

(2)Insert the extractor and push down the lance.

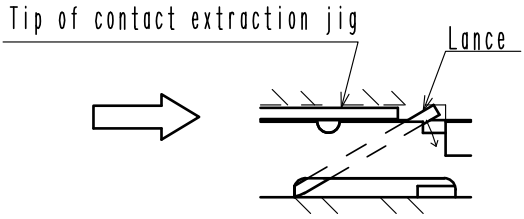

If you pull the contact toward the cable, it may not be possible to push the lance down. If the lance is difficult to push down, push the extraction jig in while pushing the contact towards the connector.

4

⚠Caution!

If you try to pull out the contact without lowering the lance, the lance may be deformed.

(3)With the lance pushed down, pull out the contacts.

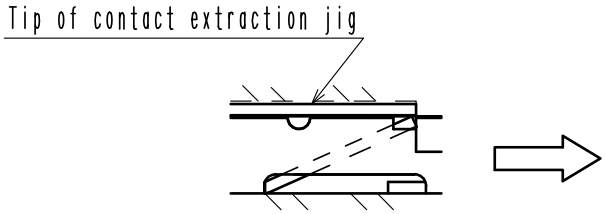

⚠Caution!

Reinsertion of the contacts and housing is limited to one time.
When reinserting a contact removed from the housing, set the lance height as shown in the below diagram.

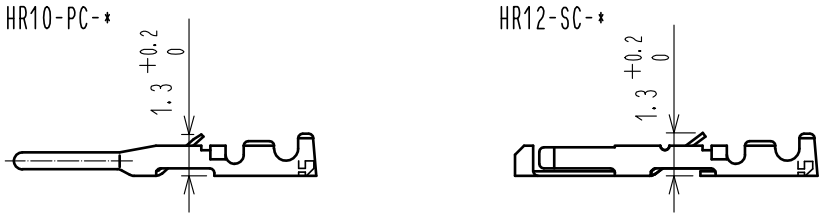

Apr.1.2024 Copyright 2024 HIROSE ELECTRIC CO., LTD. All Rights Reserved.

Apr.1.2024 Copyright 2024 HIROSE ELECTRIC CO., LTD. All Rights Reserved.

Illustration (Operation)

■Clamp crimping ⚠2

Crimp the clamp to the location shown in the following illustration using the cable crimping tool.
Applicable cable crimping tool: HR10A-TC-02 (CL150-0041-2)

Supplement!:If you wrap copper tape or the like on the cable sheath, then fold back the shield wire and caulk the clamp fitting, the contact becomes more stable.

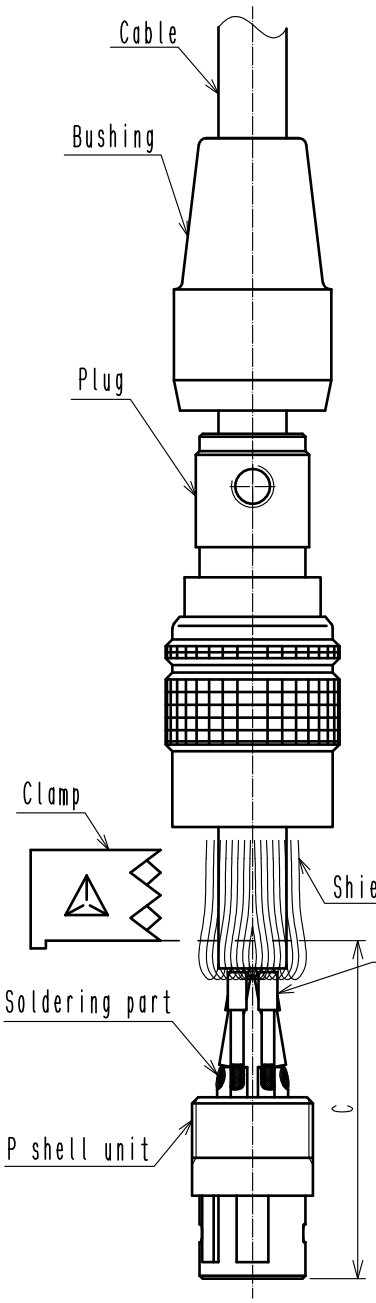

⚠Caution!

When heating the heat shrink tube, be careful that the hot air does not hit the insulated wires or the insulated case. If the insulated wire or case is exposed to hot air, the heat may cause deformation or melting, resulting in insulation failure.

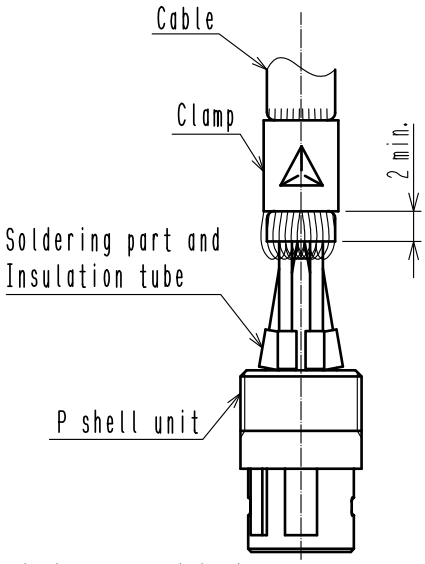

Enfold the cable with the clamp, squeeze the barrel opening of the clamp with a pair of pliers or similar tool so that it is bent to conform to the groove on the crimping tool, then crimp the clamp with the crimping tool.

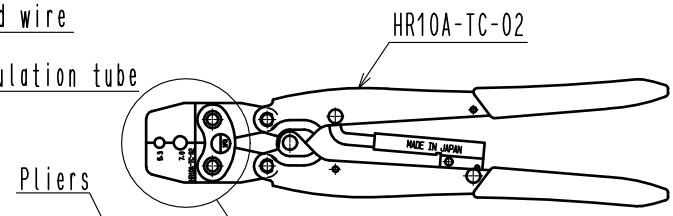

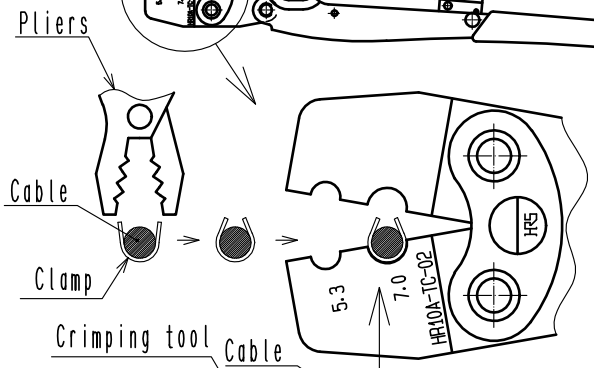

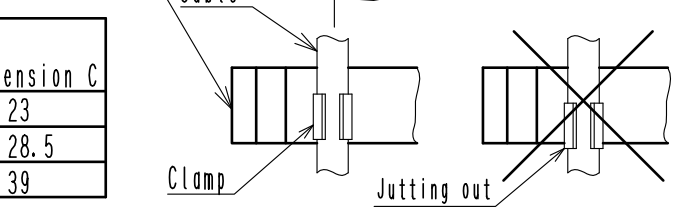

Size	Applicable cable	Applicable crimping orifice size	Dimension C
7 Size	φ5	5.3	23
10 Size	φ7	7	28.5
13 Size	φ7	7	39

* The applicable cable/applicable crimping orifice size for each size are examples.
For details, refer to the specification sheet and reference chart.

⚠Caution!

Be careful not to extend the clamp fittings beyond the crimping tool. If the clamp fittings are tightened while protruding from the crimping tool, the connector may not be assembled or performance may be impaired.

Illustration (Operation)

Connector assembly

After soldering and crimping are complete, insert the P shell unit into a wire connection jig or receptacle, then tighten the plug with the stipulated torque (shown in table 2).
To prevent loosening, apply LOCTITE 263 manufactured by HENKEL JAPAN Co.,Ltd. according to the Loctite applying procudure manual(ETAD-C0519-00).

⚠ Caution! 2

Secure the wiring jig or receptacle so that it will not move even with the torque required to assemble the connector. Insufficient fastening may cause the connector to tilt during assembly, resulting in connector damage or failure to tighten to the specified torque.

*When using a wire connection jig

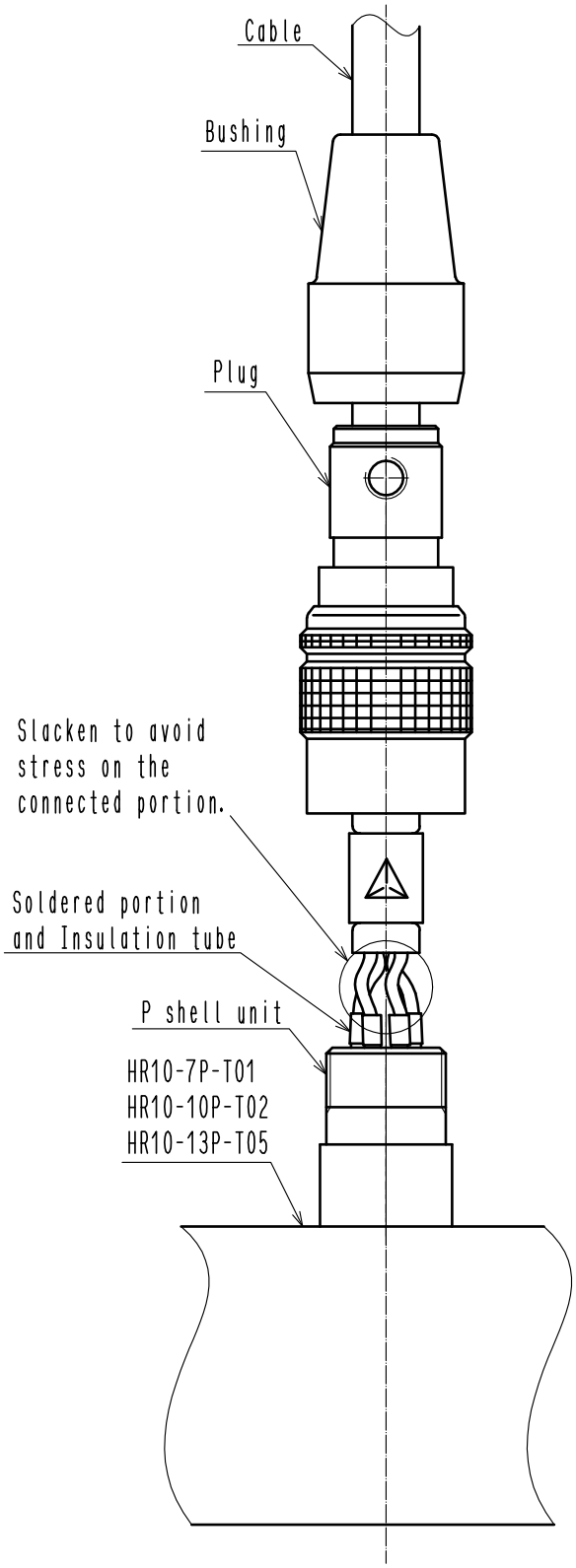

*When using a receptacle

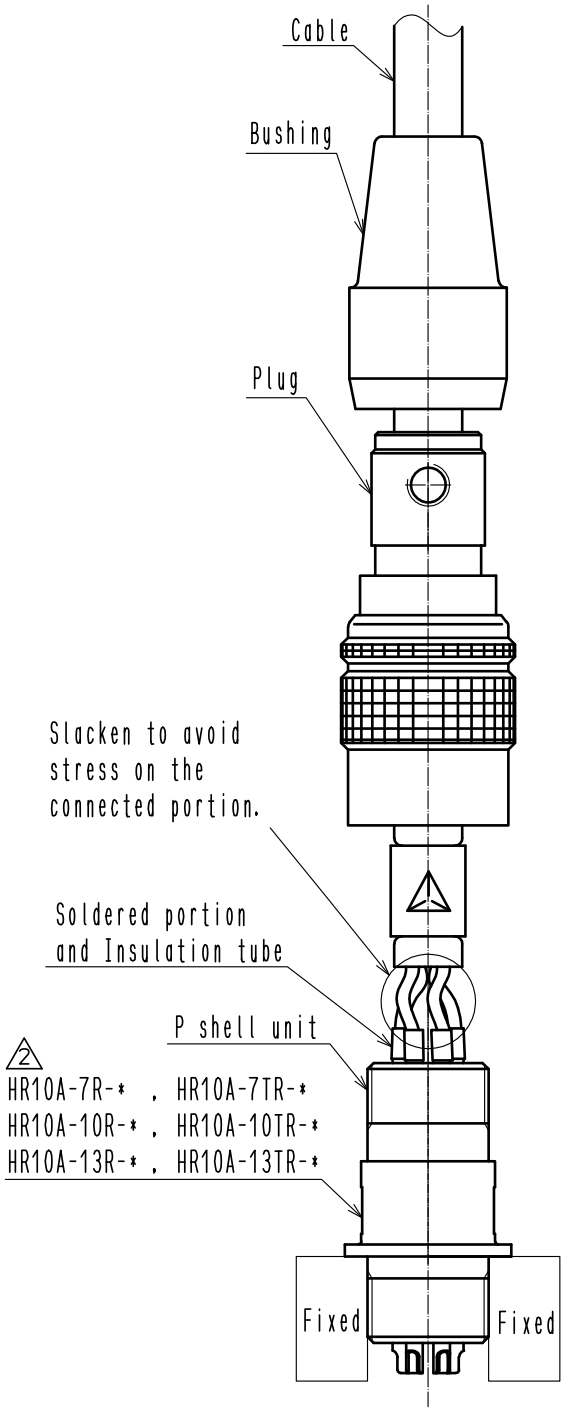

Table 2. Plug tightening torque

Size	Tightening torque
7 size	1.5 N・m
10 size	2 N・m
13 size	

Apr.1.2024 Copyright 2024 HIROSE ELECTRIC CO., LTD. All Rights Reserved.

Illustration (Operation)

■Connector assembly

After tightening the P shell unit to the plug, adjust the clamp's triangular concave portion with the set screw hole as shown in the illustration below, then tighten the set screw with a tightening torque of 0.3 N・m.
To prevent loosening, apply LOCTITE 263 manufactured by HENKEL JAPAN Co.,Ltd.

*When using a wire connection jig

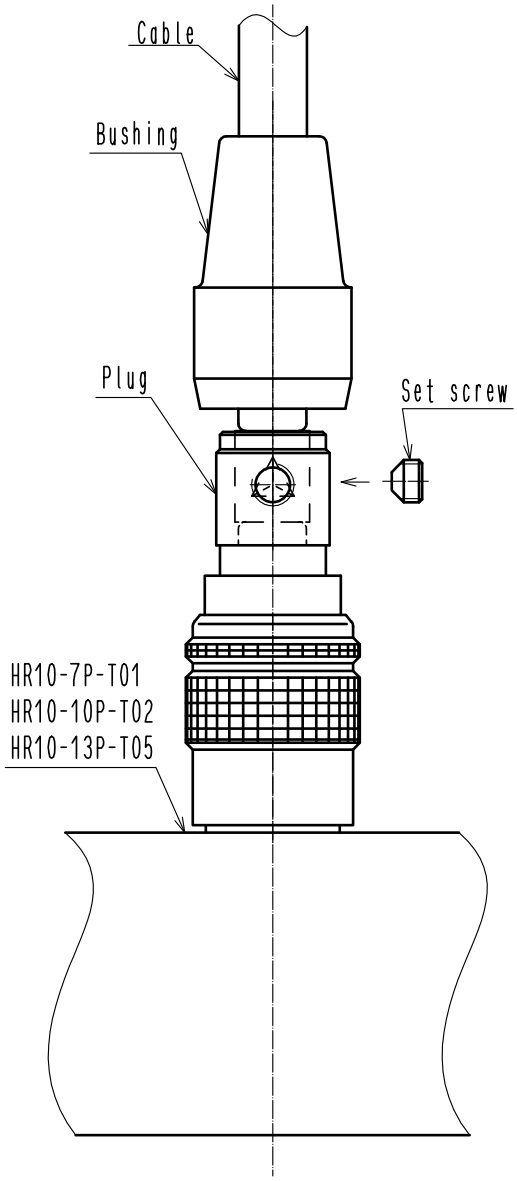

*When using a receptacle

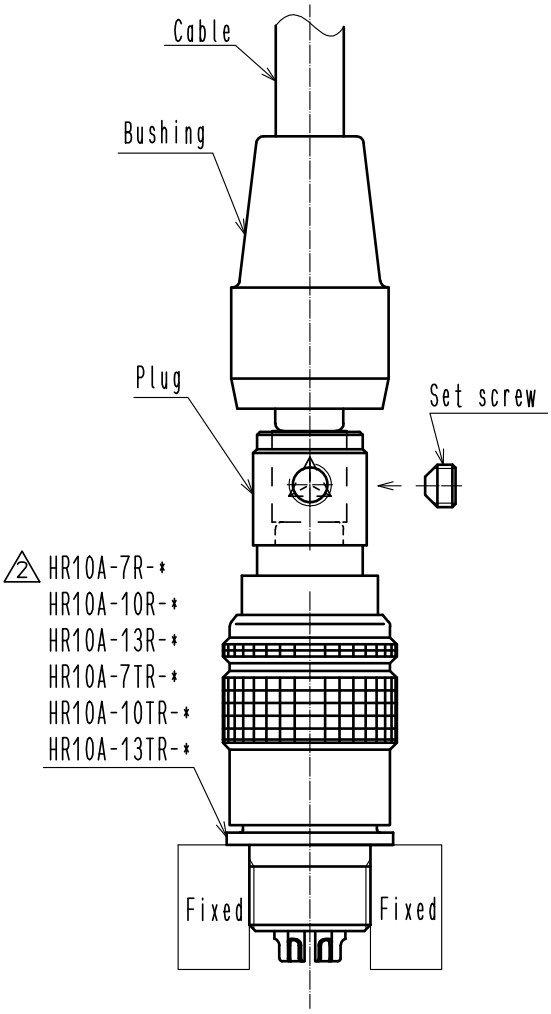

After tightening the fixing screw, cover with the bushing.
Assembly is now complete.

Apr.1.2024 Copyright 2024 HIROSE ELECTRIC CO., LTD. All Rights Reserved.