May.1.2024 Copyright 2024 HIROSE ELECTRIC CO., LTD. All Rights Reserved.
In case of consideration for using Automotive equipment / device which demand high reliability, kindly contact our sales window correspondents.

	COUNT	DESCRIPTION OF REVISION	BY	CHKD	DATE		COUNT	DESCRIPTION OF REVISION	BY	CHKD	DATE
1	1	DIS-N-000036	F.NEMOTO	S.NOZAKI	'06.02.14						

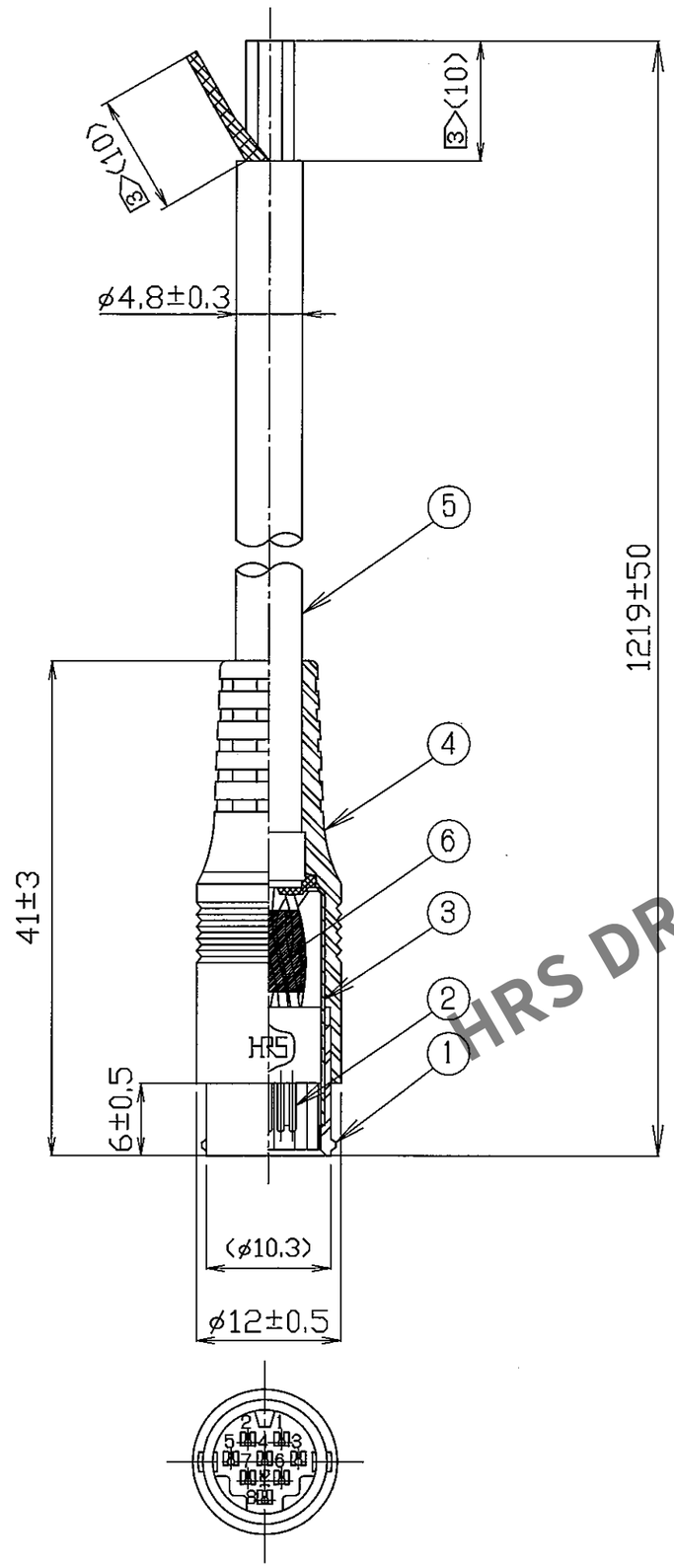

1 TABLE-1 WIRING

CONTACT NO.	READ WIRE COLOR
1	BROWN
2	RED
3	ORANGE
4	YELLOW
5	BLUE
6	GRAY
7	WHITE
8	BLACK
REF NO. 3	BRAIDED SHIELD

2 TABLE-2 CABLE SPECIFICATIONS

COMPOSITION	PRICE	
OUTER DIAMETER	φ4.8±0.3	
CONDUCTOR	8 CONTACT	BRAIDED SHIELD
COMPOSITION	φ0.127/7(AWG#28)	——
FINISH	TIN PLATED	——

NOTES 1 WIRING IS SHOWN IN THE TABLE-1.
2 CABLE SPECIFICATIONS ARE SHOWN IN THE TABLE-2.
3 (10) INDICATES THE DIMENSION FOR ELECTRIC INSPECTION.

HRS DRAWING FOR REFERENCE

NO.	MATERIAL	FINISH , REMARKS	NO.	MATERIAL	FINISH , REMARKS
3	BRASS	TIN PLATED	6		(CLOTH ADHESIVE TAPE)
2	PHOSPHOR BRONZE	TIN PLATED	5	2	(BLACK) UL2990 SHIELD CABLE, 8 CONTACTS
1	POLYCORBONATE	(BLACK) UL94V-1	4	PVC	(BLACK) UL94V-0

CODE NO.(OLD)	DRAWN	DESIGNED	CHECKED	APPROVED	RELEASED
CL - -	F.NEMOTO '06.02.09	N.KUDO '06.02.09	S.NOZAKI '06.02.10	S.NOZAKI '06.02.10	
RoHS 1					

SCALE FREE
UNITS mm
DRAWING NO. EDC3-029732-01
HRS HIROSE ELECTRIC CO., LTD.
PART NO. HR12-10P8PS1219(71)
CODE NO. CL112-0136-0-71
1/1

TO
AMC

FORM No. 233