May.1.2024 Copyright 2024 HIROSE ELECTRIC CO., LTD. All Rights Reserved.
In case of consideration for using Automotive equipment / device which demand high reliability, kindly contact our sales window correspondents.

	COUNT	DESCRIPTION OF REVISIONS	BY	CHKD	DATE		COUNT	DESCRIPTION OF REVISIONS	BY	CHKD	DATE
△					. .	△					. .
△					. .	△					. .
△					. .	△					. .

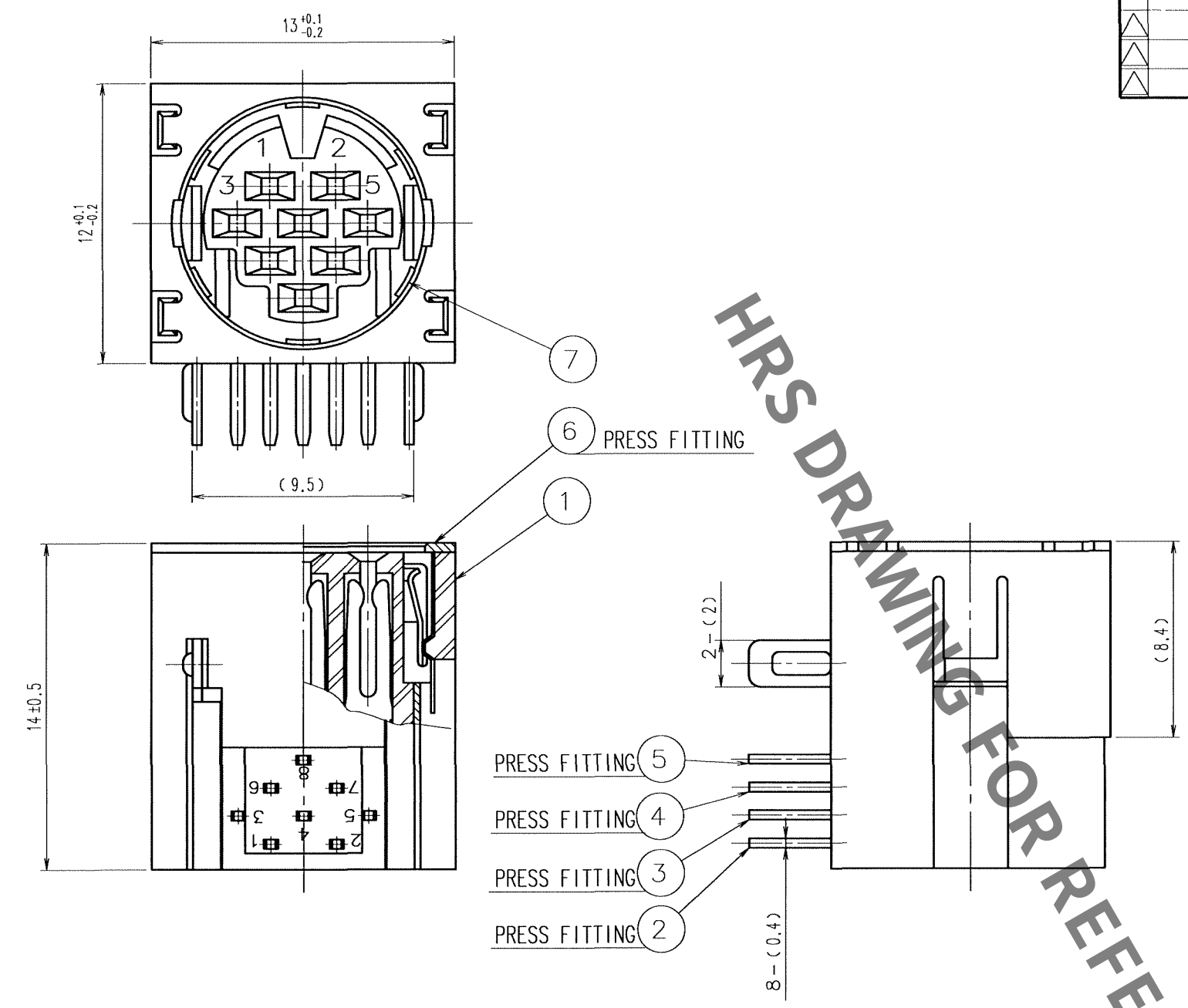

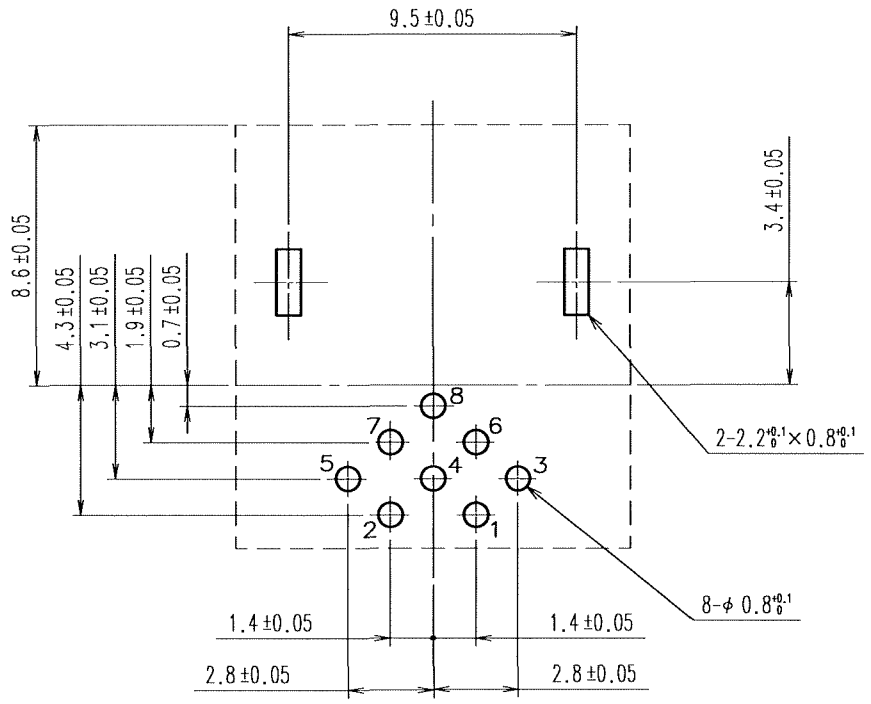

RECOMMENDED PC BORD HOLE PATTERN

(4:1)

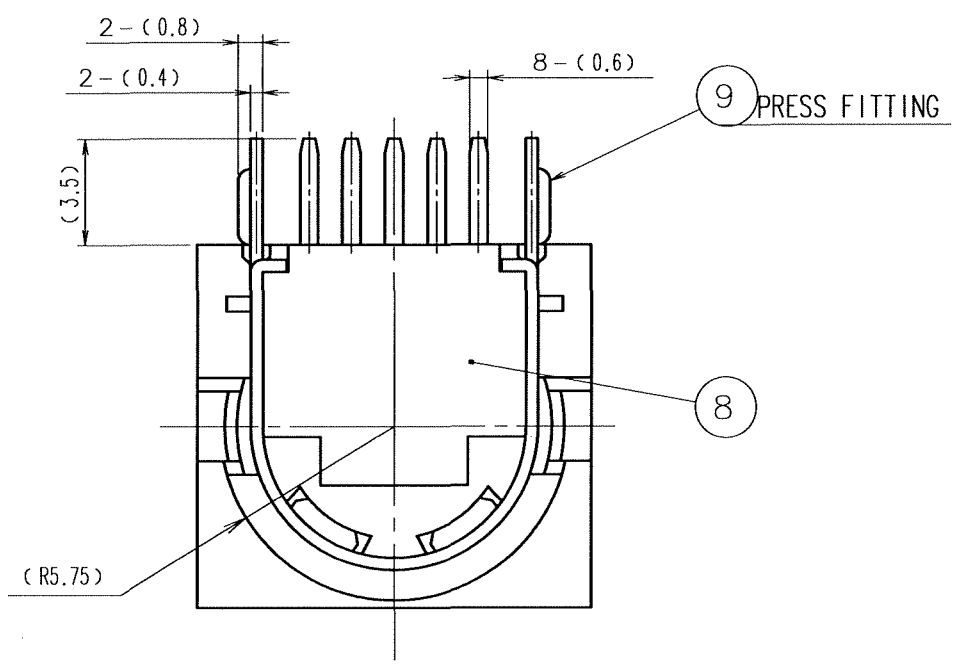

HRS DRAWING FOR REFERENCE

NO.	MATERIAL	FINISH, REMARKS	NO.	MATERIAL	FINISH, REMARKS
5	PHOSPHOR BRONZE	TIN PLATING 3μm min			
4	PHOSPHOR BRONZE	TIN PLATING 3μm min	9	PHOSPHOR BRONZE	TIN PLATING
3	PHOSPHOR BRONZE	TIN PLATING 3μm min	8	PBT	(BLACK) UL94V-0
2	PHOSPHOR BRONZE	TIN PLATING 3μm min	7	PHOSPHOR BRONZE	TIN PLATING
1	PBT	(BLACK) UL94V-0	6	PHOSPHOR BRONZE	TIN PLATING

CODE NO.(OLD)	DRAWN	DESIGNED	CHECKED	APPROVED	RELEASED
CL	H.Kawashima '05·11·22	H.Kawashima '05·11·22	T.Akiyama '05·11·22	M.Sato 05·11·25	. .

SCALE 4 : 1	DRAWING NO. EDC3-028501-74	PART NO. HR212-10RA-8SDL(74)
UNITS mm	HRS HIROSE ELECTRIC CO., LTD	CODE NO. CL112-2004-0-74 1/1

TO
R