Jun.1.2024 Copyright 2024 HIROSE ELECTRIC CO., LTD. All Rights Reserved.
In case of consideration for using Automotive equipment / device which demand high reliability, kindly contact our sales window correspondents.

	COUNT	DESCRIPTION OF REVISIONS	BY	CHKD	DATE		COUNT	DESCRIPTION OF REVISIONS	BY	CHKD	DATE
△					. .	△					. .
△					. .	△					. .
△					. .	△					. .

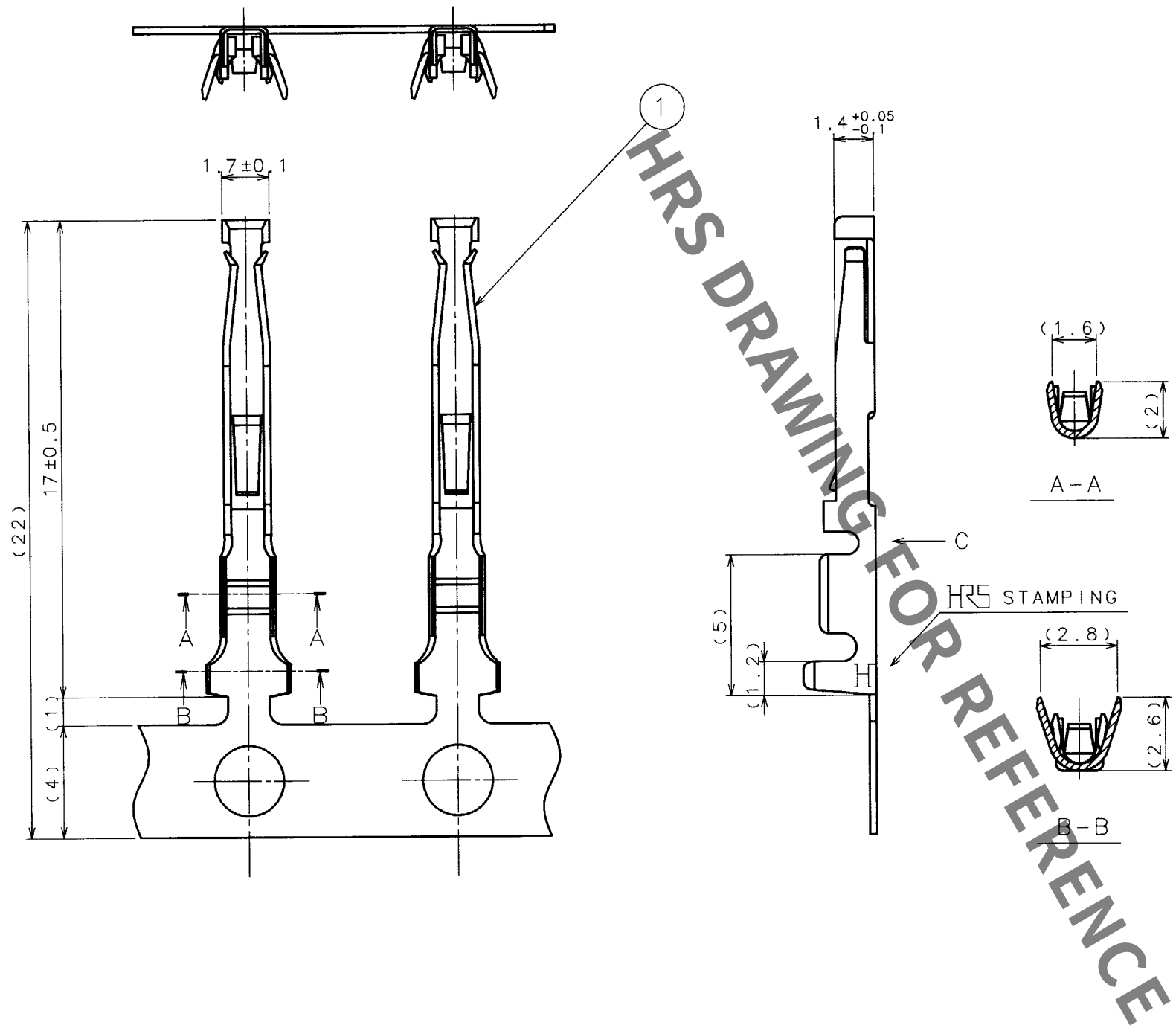

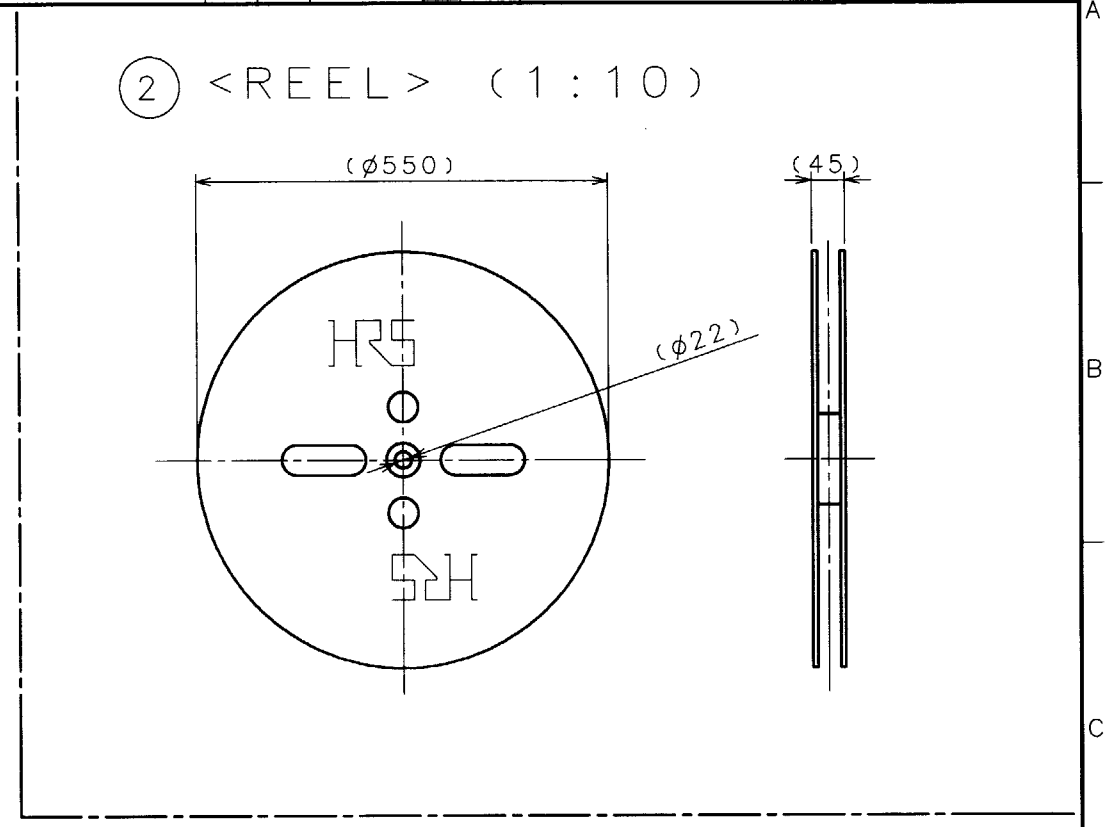

NOTES 1 APPLICABLE CONTACT EXTRACTION TOOL:
RM-TP(CL150-0008-7)
2 APPLICABLE WIRE:AWG#24~#20

NO.	MATERIAL	FINISH, REMARKS	NO.	MATERIAL	FINISH, REMARKS
1	PHOSPHOR BRONZE	SILVER PLATING (n=8000)	2	FIBERBOARD	REEL

CODE NO.(OLD)	DRAWN	DESIGNED	CHECKED	APPROVED	RELEASED
	H.YOKOMIZO 98.5.19	H.K 98.5.21	M.Sato 98.5.23	M.Yoshida 98.5.26	

SCALE 5 : 1	DRAWING NO. EDC3-009965	PART NO. JRC-SC2-212
UNITS mm	HRS HIROSE ELECTRIC CO.,LTD.	CODE NO. CL114-0249-0 1/1

TO
R

FORM NO.229