Apr.1.2024 Copyright 2024 HIROSE ELECTRIC CO., LTD. All Rights Reserved.
In case of consideration for using Automotive equipment / device which demand high reliability, kindly contact our sales window correspondents.

FIG. 1(1:1)

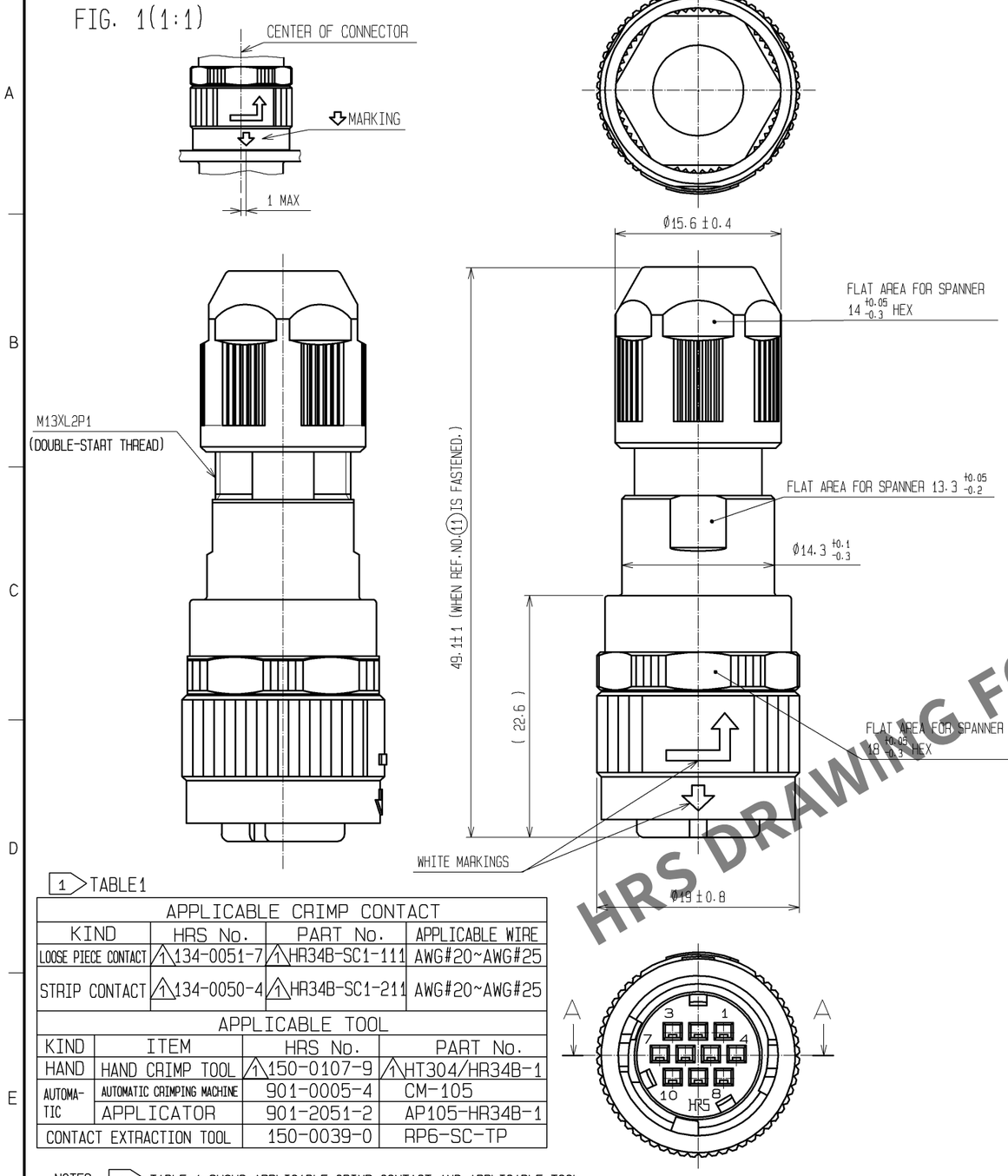

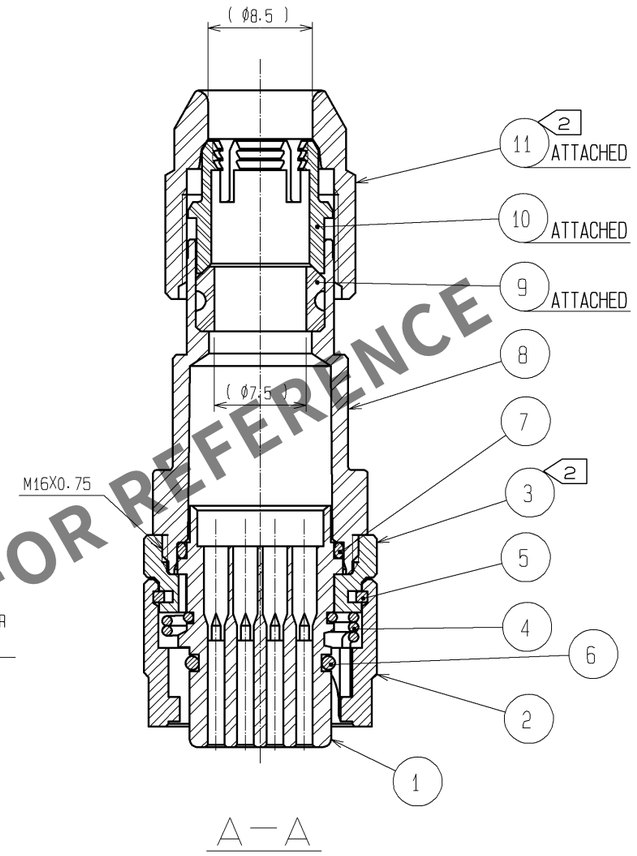

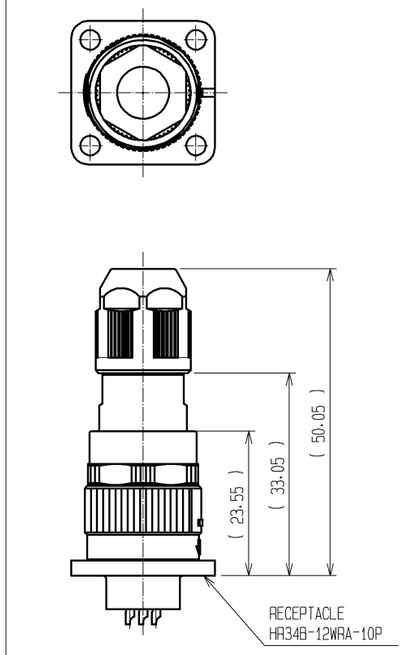

MATING CONDITION(1:1)
(WHEN REF.NO.⑪ IS FASTENED)

1 TABLE1

APPLICABLE CRIMP CONTACT			
KIND	HRS No.	PART No.	APPLICABLE WIRE
LOOSE PIECE CONTACT	1 134-0051-7	1 HR34B-SC1-111	AWG#20~AWG#25
STRIP CONTACT	1 134-0050-4	1 HR34B-SC1-211	AWG#20~AWG#25

APPLICABLE TOOL			
KIND	ITEM	HRS No.	PART No.
HAND	HAND CRIMP TOOL	1 150-0107-9	1 HT304/HR34B-1
AUTOMATIC	AUTOMATIC CRIMPING MACHINE	901-0005-4	CM-105
	APPLICATOR	901-2051-2	AP105-HR34B-1
CONTACT EXTRACTION TOOL		150-0039-0	RP6-SC-TP

NOTES
1 TABLE 1 SHOWS APPLICABLE CRIMP CONTACT AND APPLICABLE TOOL.
2 THE RECOMMENDED TIGHTENING TORQUE, ADHESIVE AND PRIMER FOR M16X0.75 PORTION OF REF NO.③ AND ⑧ AND M13XL2P1 PORTION OF REF NO.⑧ AND ⑪ ARE AS FOLLOWINGS.
THE ADHESIVE AND PRIMER SHOULD BE ATTACHED ON THE MALE SCREW PORTION OF REF NO.⑧ .
TIGHTENING TORQUE: 0.9 TO 1 N·m.
1 ADHESIVE: LOCTITE 243 MADE BY HENKEL JAPAN LTD.
PRIMER: LOCK PRIMER 7649, MADE BY HENKEL JAPAN LTD.
3 CONDUIT IS NOT APPLICABLE TO THIS CONNECTOR.
4 ROTATION EXAMPLES ARE SHOWN FOR REF. NO.①,③,⑧AND⑪.
5 MAKE SURE THAT ⇩ MARKING IS POSITIONED WITHIN 1 FROM THE CENTER OF CONNECTOR AS SHOWN IN FIG.1.WHEN MATED TO THE APPLICABLE RECEPTACLE,OTHERWISE, THE CONNECTORS ARE NOT COMPLETELY MATED,AND INSERT THIS PLUG TO THE RECEPTACLE TO THE END UNTIL THE ⇩ MARKING IS LOCATED IN THE CENTER OF THE CONNECTOR.

NOTES
6 CABLE CLAMP STRENGTH AND WATERPROOF PERFORMANCE DEPEND ON CABLE STRUCTURE SUCH AS THE JACKET MATERIAL AND HARDNESS.
WE RECOMMEND CHECKING THE PERFORMANCE BEFORE THE USAGE.

NO.	MATERIAL	FINISH , REMARKS	NO.	MATERIAL	FINISH , REMARKS
6	FLUORO RUBBER	(BLACK)			
5	PHOSPHOR BRONZE	NICKEL PLATING	11	POLYPHENYLENE SULFIDE	(BLACK) UL94V-0
4	STAINLESS STEEL		10	POLYAMIDE	(WHITE) UL94V-0
3	ZINC ALLOY	BLACK CHROME PLATING	9	HYDROGENATION ACRYLONITRILE BUTADIENE RUBBER	(GRAY)
2	ZINC ALLOY	BLACK CHROME PLATING	8	POLYAMIDE	(BLACK) UL94V-0
1	POLYPHENYLENE SULFIDE	(BLACK) UL94V-0	7	FLUORO RUBBER	(BLACK)

UNITS	SCALE	COUNT	DESCRIPTION OF REVISIONS	DESIGNED	CHECKED	DATE
mm	2 : 1	1 7	DIS-C-002525	MM. ISHII	HY. KISHI	14. 10. 28

HRS HIROSE ELECTRIC CO., LTD.

APPROVED	: MO. SATOH	08. 05. 19
CHECED	: SI. MATSUZAKI	08. 05. 19
DESIGNED	: HT. ZENBA	08. 05. 13
DRAWN	: HT. ZENBA	08. 05. 13

DRAWING NO. EDC3-115407-00
PART NO. HR34B-12WPE-10SC
CODE NO. CL134-0038-9-00
1 / 1

HRS DRAWING FOR REFERENCE