Jun.1.2024 Copyright 2024 HIROSE ELECTRIC CO., LTD. All Rights Reserved.
In case of consideration for using Automotive equipment / device which demand high reliability, kindly contact our sales window correspondents.

	COUNT	DESCRIPTION OF REVISIONS	BY	CHKD	DATE		COUNT	DESCRIPTION OF REVISIONS	BY	CHKD	DATE
△					. .	△					. .
△					. .	△					. .
△					. .	△					. .

NOTES 1 THE DIMENSION IN A PARENTHESIS IS FOR REFERENCE.
2 APPLICABLE CABLE DIMENSIONS ARE AS FOLLOWS.

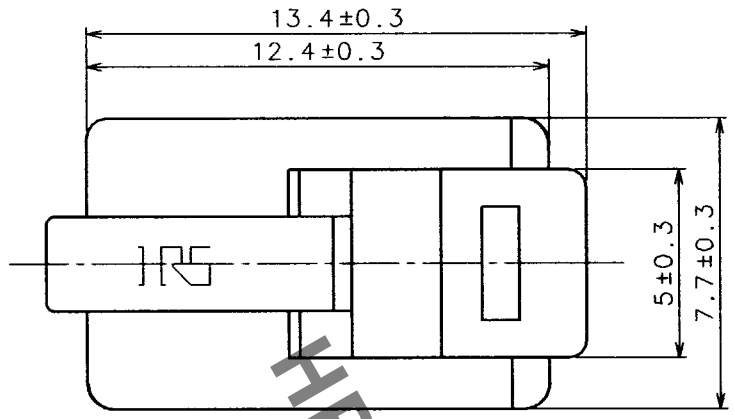

APPLICABLE CABLE		
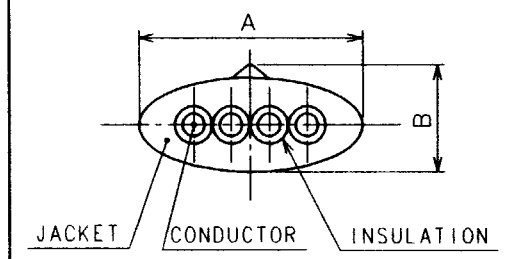	INSULATION (ϕmm)	0.90~1.00
	VINYL SHEATH (ϕmm) A×B	4.8×2.6

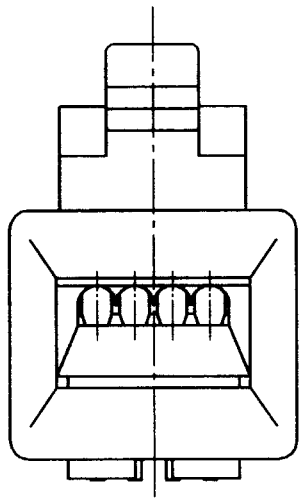

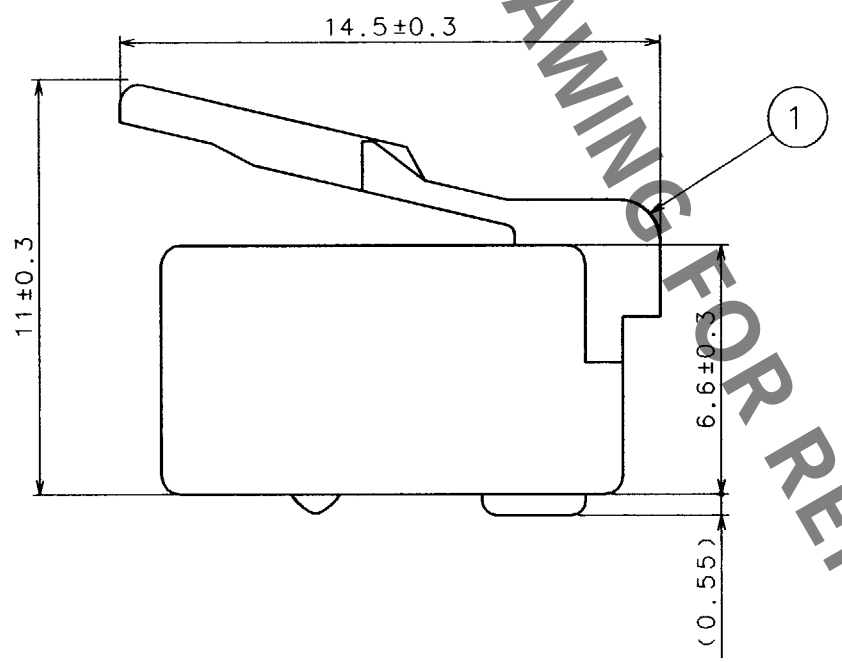

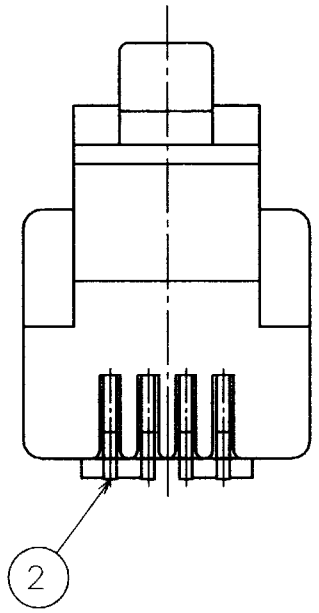

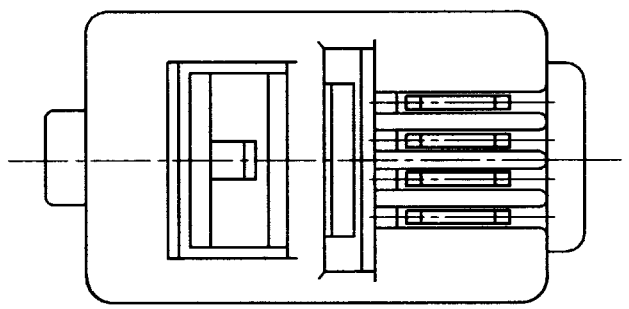

HRS DRAWING FOR REFERENCE

1	POLYCARBONATE	TRANSPARENCY	2	PHOSPHOR BRONZE	GOLD PLATING
NO.	MATERIAL	FINISH, REMARKS	NO.	MATERIAL	FINISH, REMARKS

CODE NO.(OLD)	DRAWN	DESIGNED	CHECKED	APPROVED	RELEASED
CL	S. Sato '97.12.17	S. Sato '97.12.17	H. Miwa 97.12.17	S. Suzuki 97.12.18	

SCALE 5 : 1	DRAWING NO. EDC3-009972	PART NO. TM3P-44P
UNITS mm	HRS HIROSE ELECTRIC CO.,LTD.	CODE NO. CL222-0207-2 1/1

FORM NO.229

TO
Q2
USA