Apr.1.2024 Copyright 2024 HIROSE ELECTRIC CO., LTD. All Rights Reserved.
In case of consideration for using Automotive equipment / device which demand high reliability, kindly contact our sales window correspondents.

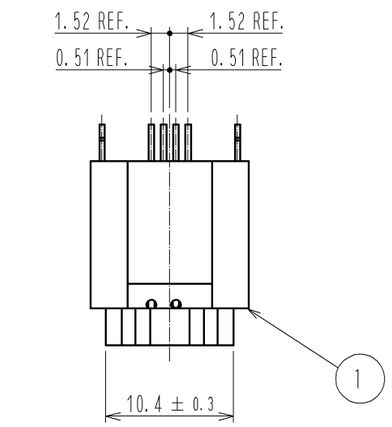

A—A

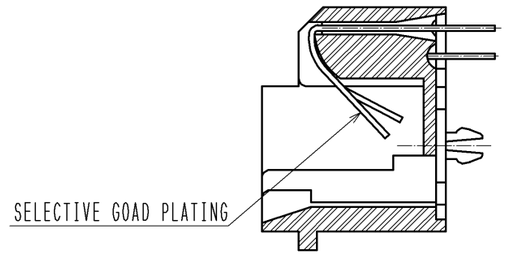

RECOMMENDED PC BOARD HOLE PATTERN (4:1)

(MOUNTING SIDE)

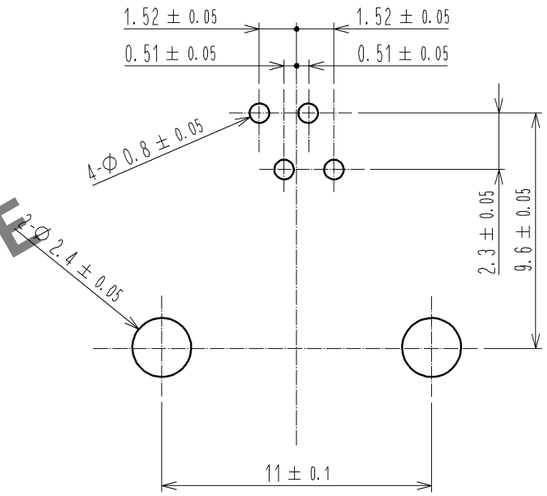

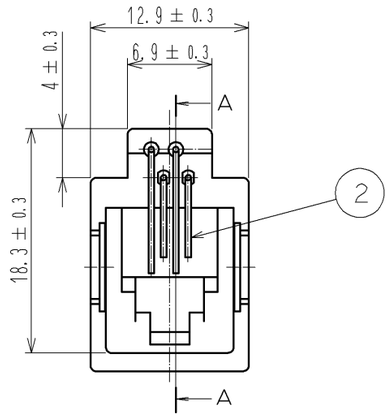

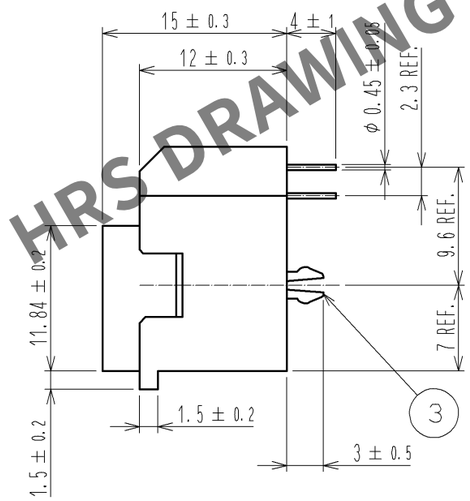

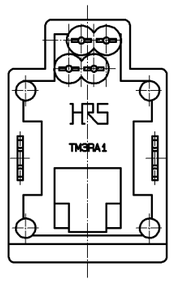

HRS DRAWING FOR REFERENCE

NO.	MATERIAL	FINISH , REMARKS	NO.	MATERIAL	FINISH , REMARKS
2	PHOSPHOR BLONZE	CONTACT AREA:GOLD PLATING 1μm LEAD AREA:GOLD PLATING 0.03μm THE OTHER AREA:NICKEL PLATING 1.27μm			
1	PBT	BLACK, UL94V-0	3	PHOSPHOR BLONZE	TIN REFLOW PLATING

UNITS	SCALE	COUNT	DESCRIPTION OF REVISIONS	DESIGNED	CHECKED	DATE
mm	2 : 1					

HRS HIROSE ELECTRIC CO., LTD.

APPROVED	: RI. TAKAYASU	12.06.05	DRAWING NO.	EDC3-025815-03
CHECKED	: EJ. WAKATSUKI	12.06.05	PART NO.	TM3RA1-44(50)
DESIGNED	: SG. CHAMURA	12.06.04		
DRAWN	: SG. CHAMURA	12.06.04	CODE NO.	CL222-1374-0-50 △ 1/1

FORM HC0011-5-7