Apr.1.2024 Copyright 2024 HIROSE ELECTRIC CO., LTD. All Rights Reserved.
In case of consideration for using Automotive equipment / device which demand high reliability, kindly contact our sales window correspondents.

	COUNT	DESCRIPTION OF REVISIONS	BY	CHKD	DATE		COUNT	DESCRIPTION OF REVISIONS	BY	CHKD	DATE
△					. .	△					. .
△					. .	△					. .
△					. .	△					. .

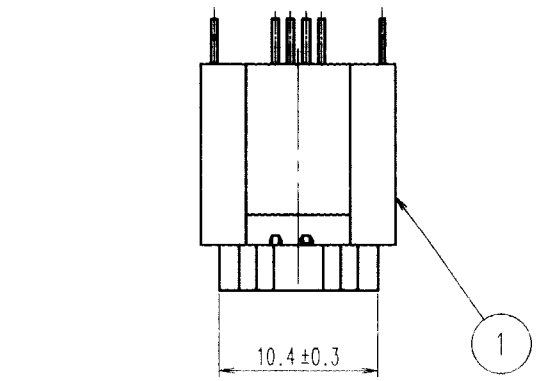

A – A

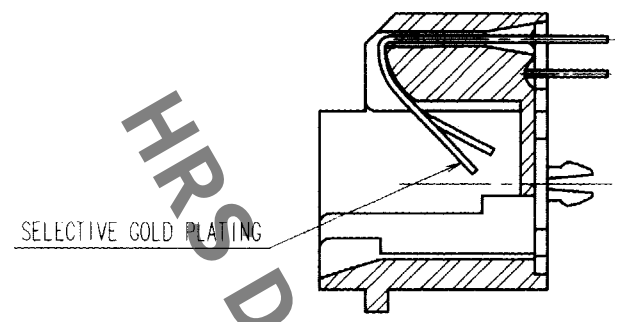

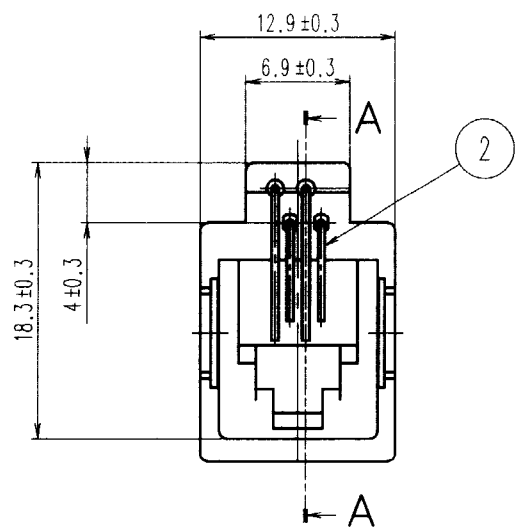

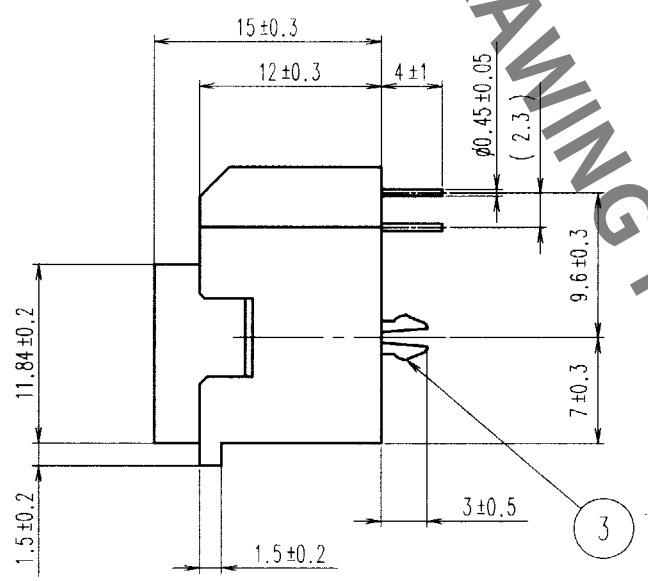

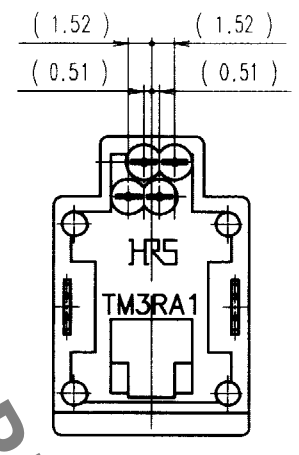

RECOMMENDED PC BOARD HOLE PATTERN (4 : 1)
(MOUNTING SIDE) t=1.6

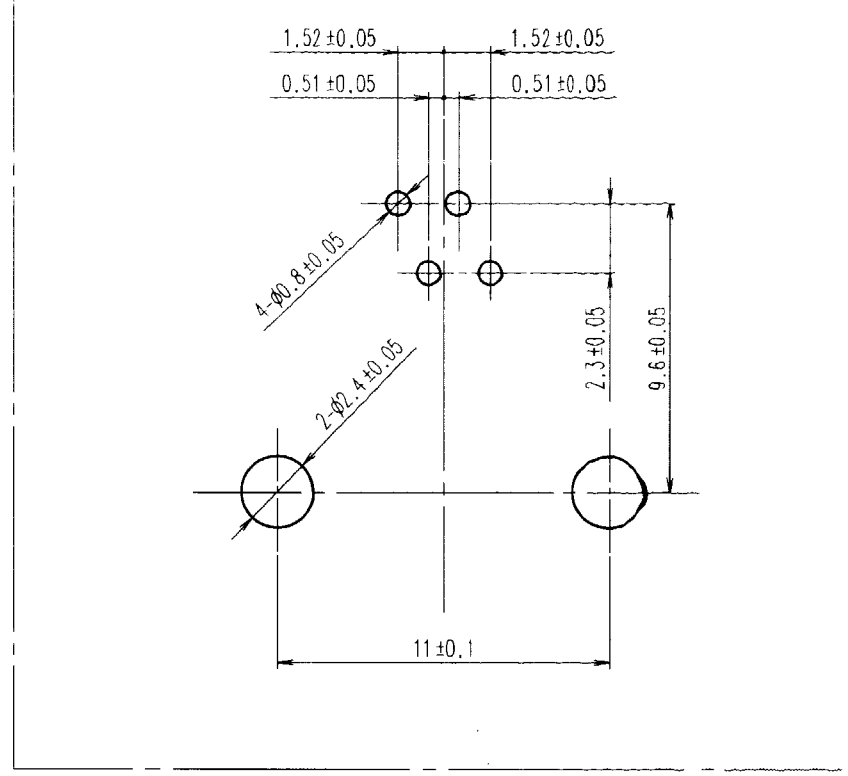

HRS DRAWING FOR REFERENCE

NOTE. THE DIMENSIONS IN PARENTHESES ARE FOR REFERENCE.

NO.	MATERIAL	FINISH, REMARKS	NO.	MATERIAL	FINISH, REMARKS
2	PHOSPHOR BRONZE	SELECTIVE GOLD PLATING 0.5±0.1μm			
1	PBT	UL94V-0 (BLACK)	3	PHOSPHOR BRONZE	TIN PLATING

CODE NO.(OLD)	DRAWN	DESIGNED	CHECKED	APPROVED	RELEASED
	T. Kameya 03.12.15	T. Kameya 03.12.15	T. Watanabe 03.12.16	H. Miura 03.12.16	. .

SCALE 2 : 1	DRAWING NO. EDC3-025815-02	PART NO. TM3RA1-44(60)
UNITS mm	HRS HIROSE ELECTRIC CO., LTD	CODE NO. CL222-1374-0-60

1/1

FORM NO.229

TO
Q