Apr.1.2024 Copyright 2024 HIROSE ELECTRIC CO., LTD. All Rights Reserved.
In case of consideration for using Automotive equipment / device which demand high reliability, kindly contact our sales window correspondents.

	COUNT	DESCRIPTION OF REVISIONS	BY	CHKD	DATE		COUNT	DESCRIPTION OF REVISIONS	BY	CHKD	DATE
△					. .	△					. .
△					. .	△					. .
△					. .	△					. .

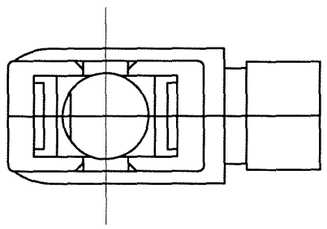

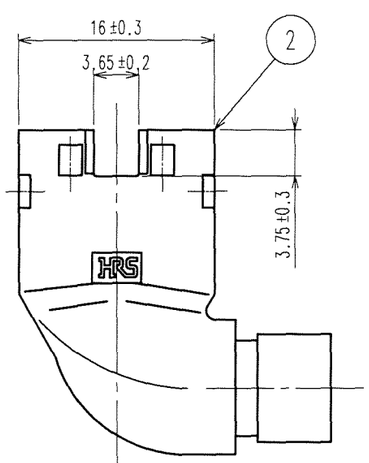

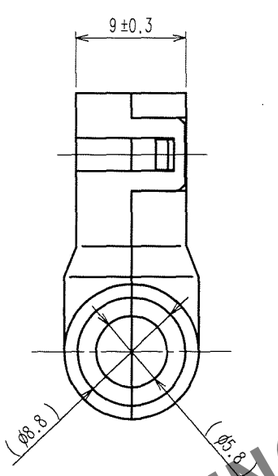

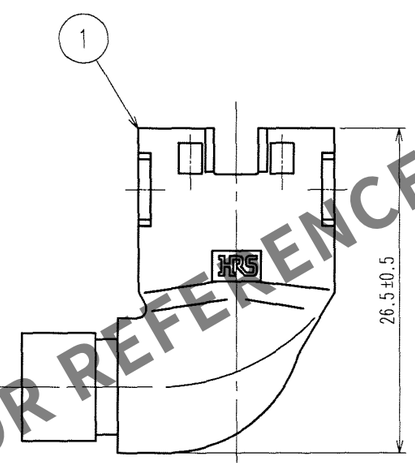

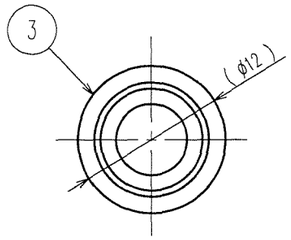

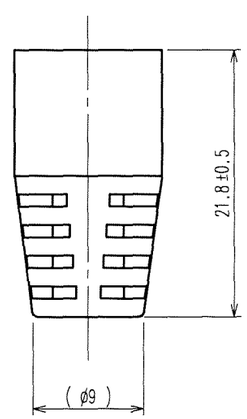

ASSEMBLED

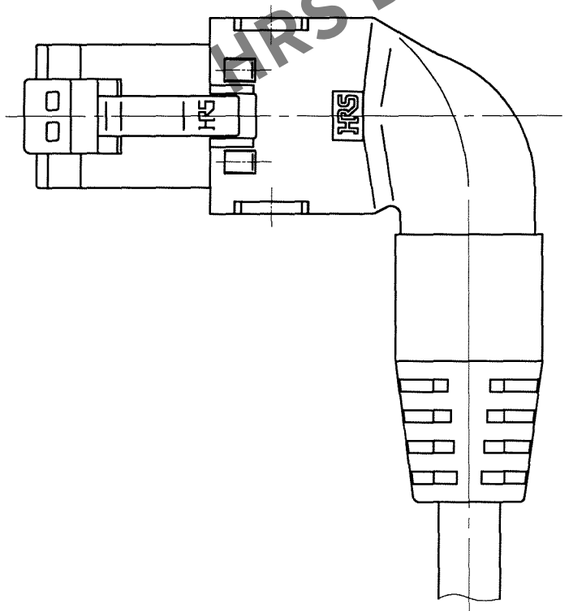

HRS DRAWING FOR REFERENCE

NOTE 1. COMPONENTS OF REF. NO. ① ② AND ③ ARE PACKED SEPARATELY.

NO.	MATERIAL	FINISH, REMARKS	NO.	MATERIAL	FINISH, REMARKS
2	POLYCARBONATE	(LIGHT BEIGE) UL94V-0	3	PVC	(LIGHT BEIGE)
1	POLYCARBONATE	(LIGHT BEIGE) UL94V-0			

CODE NO.(OLD)	DRAWN	DESIGNED	CHECKED	APPROVED	RELEASED
	F. Tonigachi 05.12.22	F. Tonigachi 05.12.22	Y. Enami 05.12.22	H. Miura 05.12.22	. .

SCALE	DRAWING NO.	PART NO.
2 : 1	EDC3-027396-03	TM11PA-88P(55)
UNITS mm	HIROSE ELECTRIC CO., LTD	CODE NO. CL222-1643-0-55 1/1

TO
Q

FORM NO.229