Apr.1.2024 Copyright 2024 HIROSE ELECTRIC CO., LTD. All Rights Reserved.
In case of consideration for using Automotive equipment / device which demand high reliability, kindly contact our sales window correspondents.

HRS DRAWING FOR REFERENCE

MATED PLUG

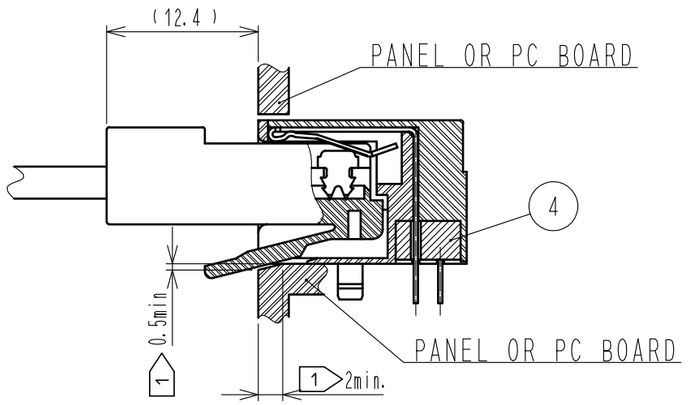

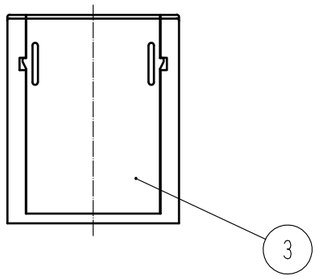

RECOMMENDED PC BOARD HOLE PATTERN
(t=1.6)

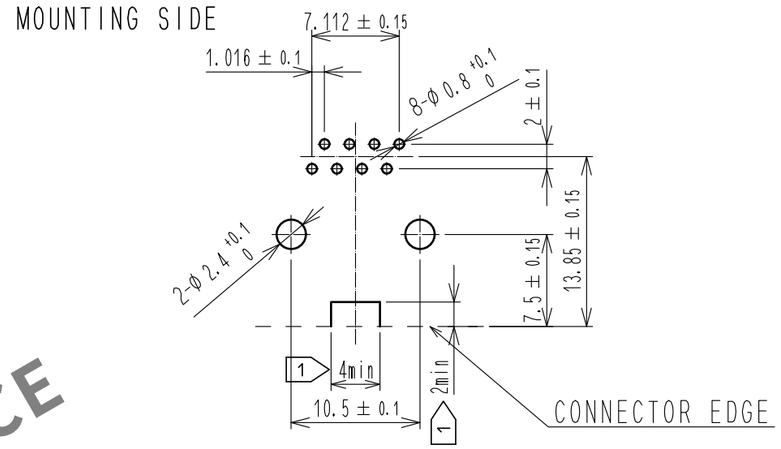

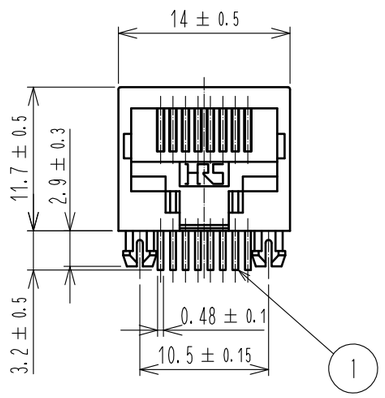

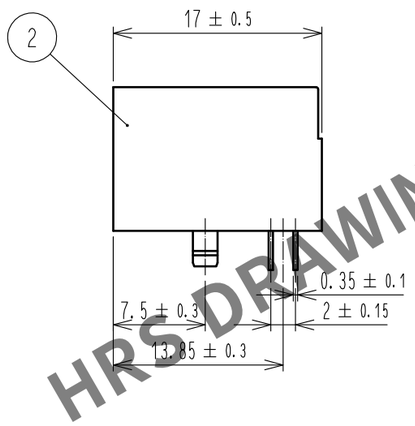

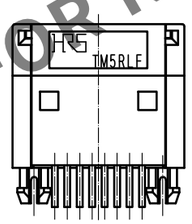

PANEL CUT-OUT

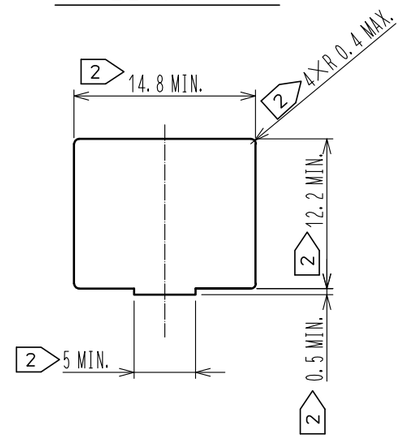

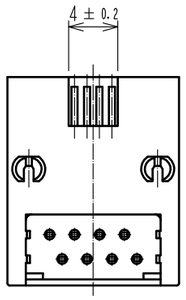

NOTE) 1 NOTCH IN ACCORDANCE WITH THE DIMENSION FOR PLUG LOCK LEVER SPACE WHEN MANUFACTURING THE PANEL AND PCB.

2 PANEL CUT-OUT DIMENSIONS SHALL BE DETERMINED AS SMALL AS POSSIBLE CONSIDERING TOLERANCE OF THE PANEL AND PCB ASSEMBLY, AND TOLERANCE OF THE PANEL PROCESS.

NO.	MATERIAL	FINISH , REMARKS	NO.	MATERIAL	FINISH , REMARKS
1	PHOSPHOR BRONZE	CONTACT AREA : GOLD PLATING 1.27μm MIN. MOUNTING AREA : TIN REFLOW PLATING 1μm MIN. UNDER PALTING : NICKEL PLATING 1μm MIN.	4	FERRITE	
			3	PBT	UL94V-0, BLACK
			2	PBT	UL94V-0, BLACK

UNITS	SCALE	COUNT	DESCRIPTION OF REVISIONS	DESIGNED	CHECKED	DATE
mm	2 : 1	0				

HRS HIROSE ELECTRIC CO., LTD.

APPROVED	: MN. KENJO	20201124	DRAWING NO.	EDC-047408-40-00
CHECKED	: TU. TANIGUCHI	20201120	PART NO.	TM5RLF-88(40)
DESIGNED	: HY. MATSUDA	20201120	CODE NO.	CL0222-2666-0-40
DRAWN	: DS. HIROWATARI	20201120		0 1/1

FORM HC0011-5-7