May.1.2024 Copyright 2024 HIROSE ELECTRIC CO., LTD. All Rights Reserved.
In case of consideration for using Automotive equipment / device which demand high reliability, kindly contact our sales window correspondents.

MATED PLUG(REFERENCE)

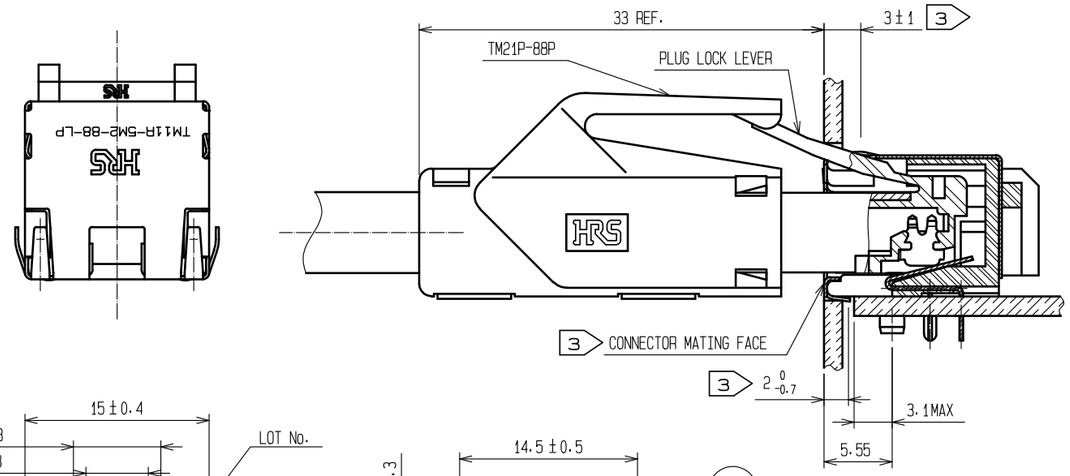

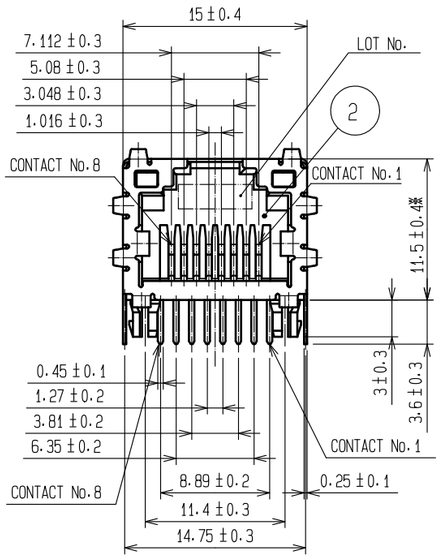

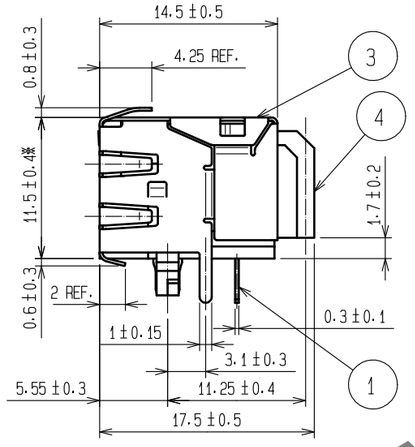

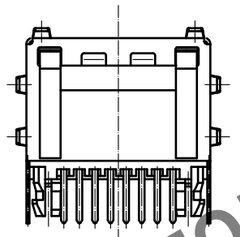

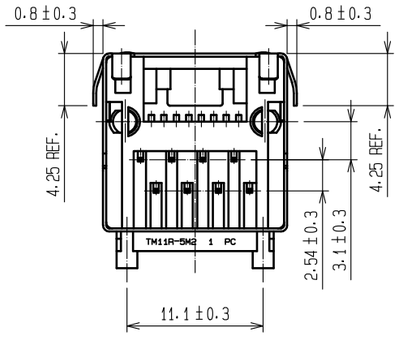

NOTE 1 THIS PART IS THE MODULAR JACK WHICH SATISFIED THE PERFORMANCE OF CATEGORY 5 IN 1,2,3,6 PAIR , AND IS SUPPORTING TRANSMISSION OF FAST ETHERNET(100BASE-TX). APPLICABLE PLUG CONNECTOR:TM21P-88P.

2 NOTCH IN ACCORDANCE WITH THE DIMENSION FOR PLUG LOCK LEVER SPACE WHEN MANUFACTURING PANEL.

3 CONTACT POSITIONS OF OUTER SHIELD SPRINGS SEEING FROM FRONT VIEW ARE AS SHOWN BELOW FOR YOUR REFERENCE OF PANEL LOCATION.
UPPER AND SIDE:3±1 LOWER:2 -0.7

4 LED TO BE MOUNTED ONTO PCB. USE ONLY SATISFYING SPECIFIED DIMENSIONS. IN ADDITION, PLEASE CONFIRM ABOUT THE SPEC OF LED TO THE CORRESPONDING MAKER.

4 APPLICABLE LED

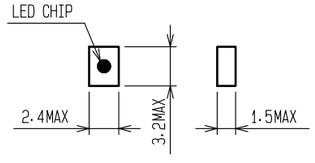

5 CENTER OF LED TO BE ALIGNED AT THE CENTER OF THE SPECIFIED DIMENSION FOR MOUNTING.

8 FCC PLUG DIMENSION

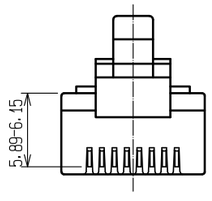

PCB PATTERN(REFERENCE)
MOUNTING SIDE(t=1.6)

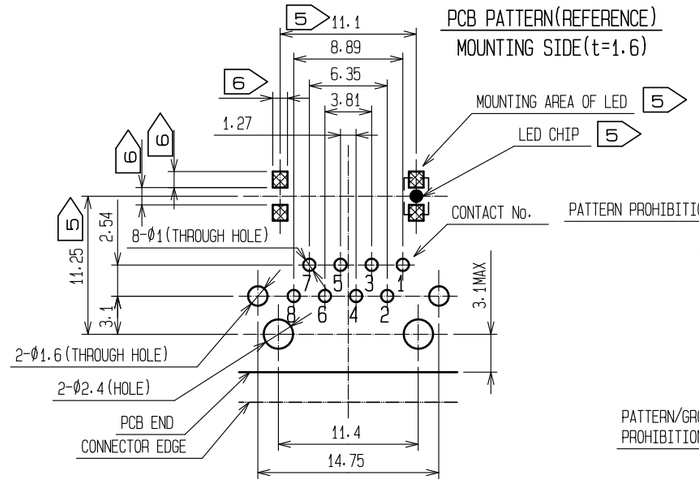

PATTERN/GROUND PROHIBITION AREA

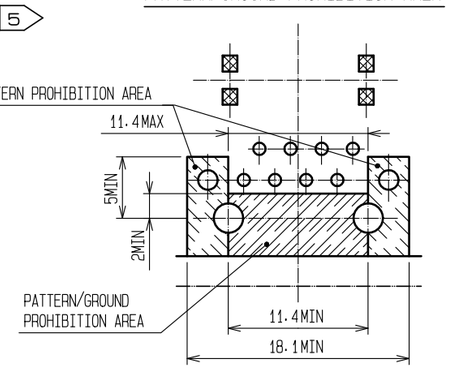

7 FIGURE FOR PACKING(FREE)

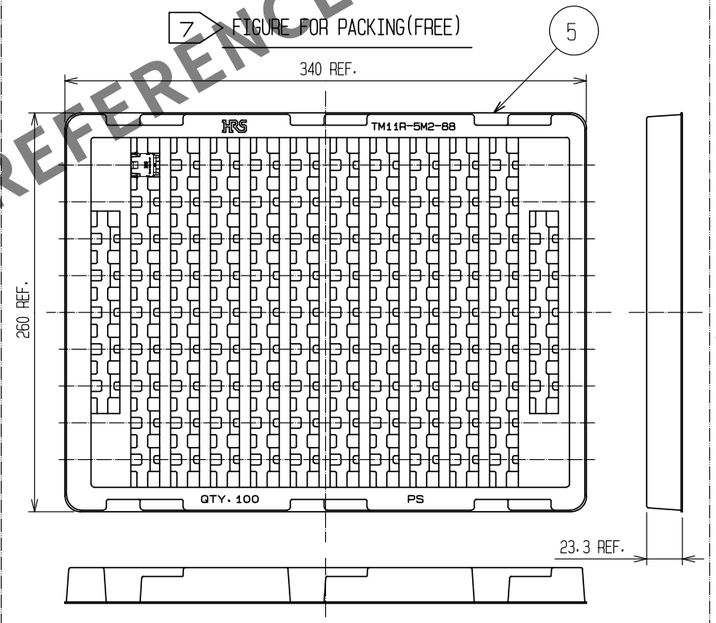

PANEL CUT OUT(REFERENCE)

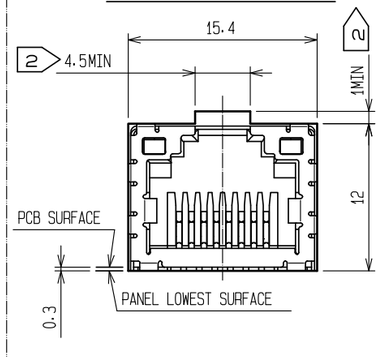

6 REFER TO NEWEST SPECIFICATIONS FOR LED PAD DIMENSIONS.

7 TO BE PACKED IN TRAY:100pcs/TRAY.

2 8 DO NOT MATE WITH THE PLUG NONCONFORMING TO FCC STANDARD.
TAKE EXTRA CARE TO THE CONTACT LOCATION SHOWN IN THE FIGURE.

9 ※INDICATES DUPLICATED DIMENSION.

10 THERE IS A POSSIBILITY THAT PART NO.3 CAN BE SCRATCHED DURING THE MANUFACTURING OR TRANSPORTATION PROCESS. HOWEVER, THIS WILL NOT CAUSE ANY PROBLEMS TO THE PRODUCT PERFORMANCE.

NO.	MATERIAL	FINISH , REMARKS	NO.	MATERIAL	FINISH , REMARKS
2	PBT	UL94V-0(Black)	5	Polystyrene	
1	Phosphor Bronze	Contact area:gold plating 1.3μm min Lead area :tin reflow plating 1μm min Under :nickel plating 1μm min	4	Polycarbonate	UL94V-0(Clear)
			3	Copper Alloy	Over :tin reflow plating 1μm min Under :copper plating 0.3μm min

UNITS	SCALE	COUNT	DESCRIPTION OF REVISIONS	DESIGNED	CHECKED	DATE
mm	2 : 1	2 1	DIS-E-00007453	KIM JAEHYEON	KG.OKITA	20211108

HIROSE ELECTRIC CO., LTD.

APPROVED	:MN.KENJO	20200407	DRAWING NO.	EDC-123340-70-00
CHECKED	:TU.TANIGUCHI	20200407	PART NO.	TM11R-5M2-88-LP(70)
DESIGNED	:KIM JAEHYEON	20200407	CODE NO.	CL0222-2905-0-70
DRAWN	:DS.HIROWATARI	20200407		2 1/1

HRS DRAWING FOR REFERENCE