May.1.2024 Copyright 2024 HIROSE ELECTRIC CO., LTD. All Rights Reserved.
In case of consideration for using Automotive equipment / device which demand high reliability, kindly contact our sales window correspondents.

△の数 △COUNT	訂正記事 DESCRIPTION OF REVISIONS	担当 BY	検図 CHKD	年月日 DATE	△の数 △COUNT	訂正記事 DESCRIPTION OF REVISIONS	担当 BY	検図 CHKD	年月日 DATE
△				. .	△				. .
△				. .	△				. .
△				. .	△				. .

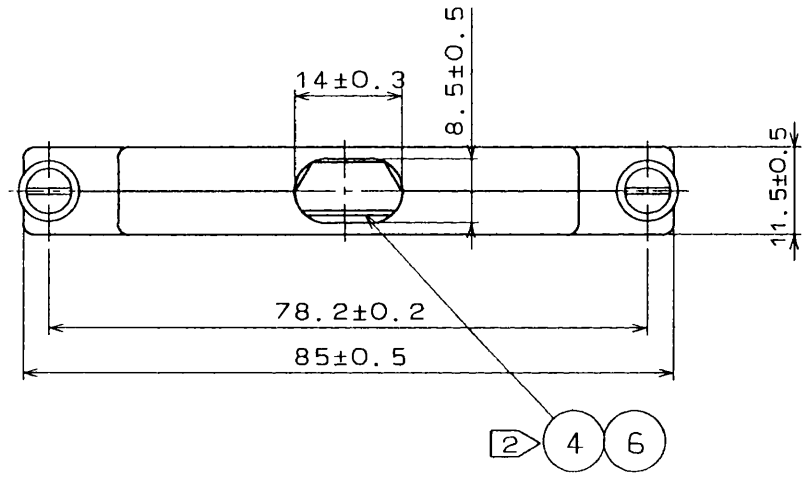

Note 1. The dimensions in the parenthesis are reference.

2 Parts No.4 and 6 are pakaged.

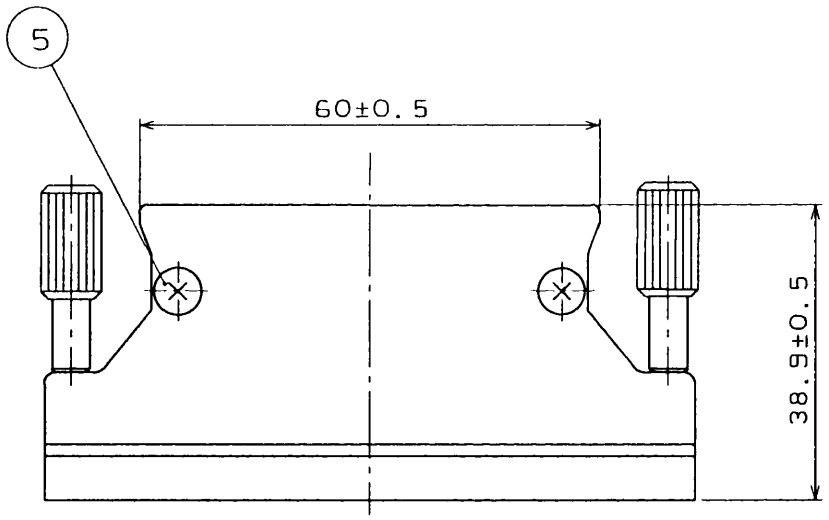

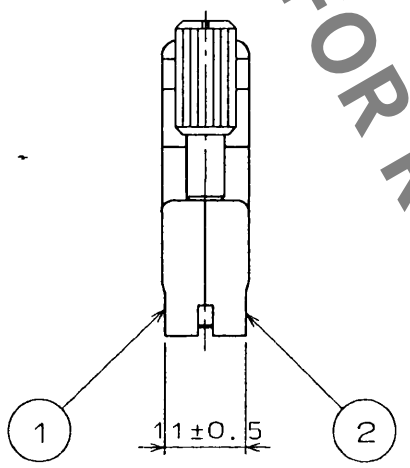

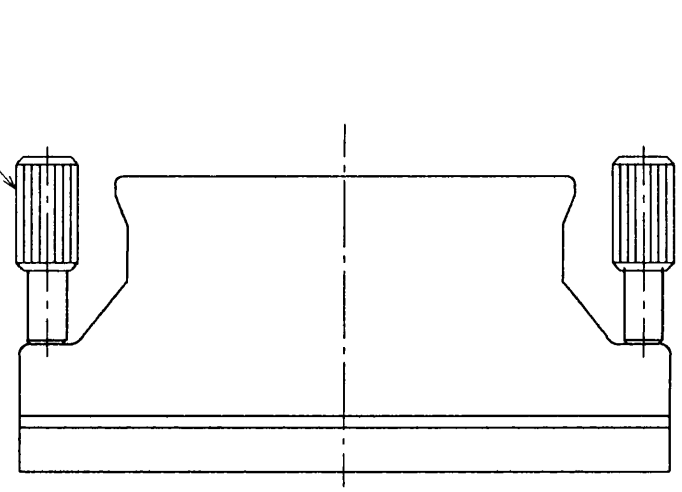

HRS DRAWING FOR REFERENCE

部番 No.	材質 MATERIAL	処理，備考 FINISH , REMARKS	部番 No.	材質 MATERIAL	処理，備考 FINISH , REMARKS
3	Steel	Nickel plated	6	Brass	Nickel plated
2	Zinc alloy die cast	Silver burning coating	5	Brass	Nickel plated
1	Zinc alloy die cast	Silver burning coating	4	Stainless steel	

一般公差 GENERAL DIMENSION TOLERANCE	
寸法区分 OVER TO	公差 TOLERANCE
6	±0.3
6 18	±0.5
18 50	±0.7
50 125	±1
125 250	±1.3
250 500	±2
角度 ANGULAR	±1°

旧製品コード CODE No. (OLD)	製図 DRAWN	担当 DESIGNED	検図 CHECKED	査閲 REVIEWED	承認 APPROVED	出図 ISSUED
	H. Shimazu 7.15.91	T. Aso 7.15.91	A. Sugaki 7.15.91	S. Iwata 7.15.91	A. Nakazawa 7.15.91	. .

図名 DRAWING NAME: 承認図 DRAWING FOR APPROVAL

図番 DRAWING No.: ADC3-27202

製品名 PART No.: DX-100-CV1

ヒロセ電機株式会社 HIROSE ELECTRIC CO., LTD.

単位 UNITS: mm

尺度 SCALE: 1:1

製品コード CODE No.: CL230-0044-4

形別配布先 TO
Q1

FORM No. 202