May.1.2024 Copyright 2024 HIROSE ELECTRIC CO., LTD. All Rights Reserved.
In case of consideration for using Automotive equipment / device which demand high reliability, kindly contact our sales window correspondents.

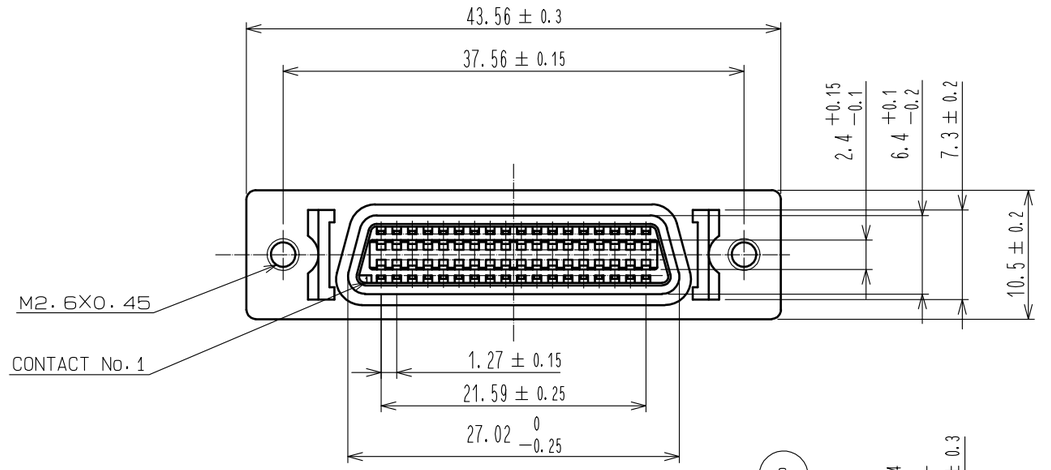

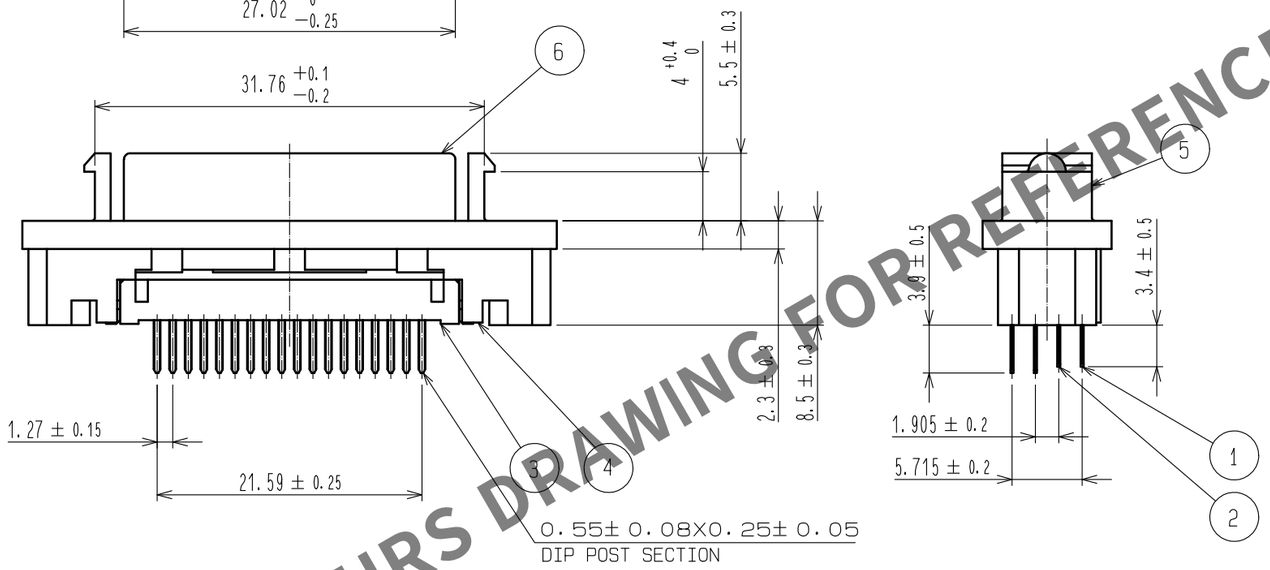

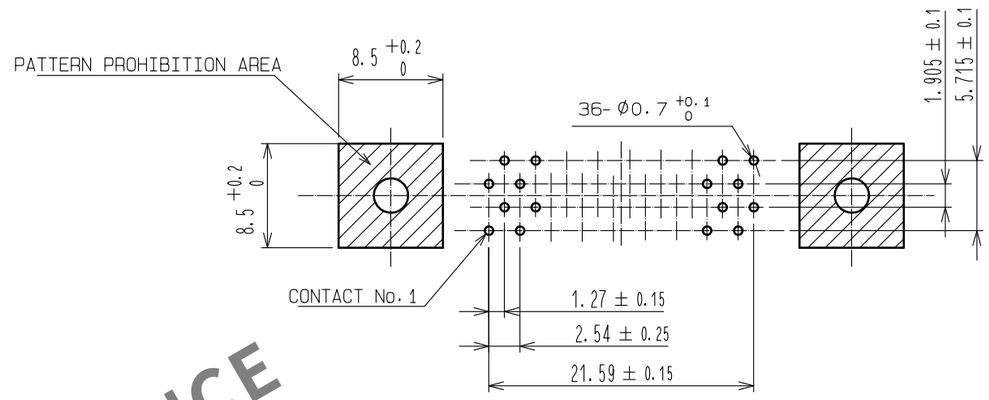

RECOMMENDED PC BOARD PATTERN

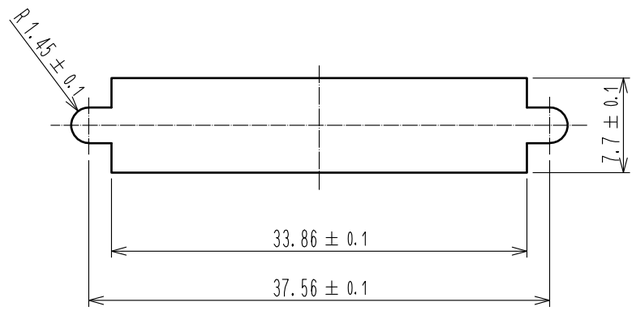

RECOMMENDED PANEL CUTOUT

(PANEL THICKNESS:1.6mm MAX)

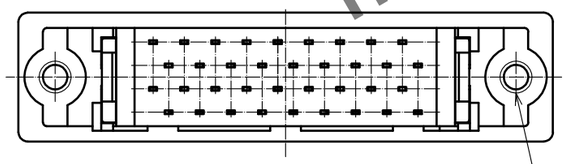

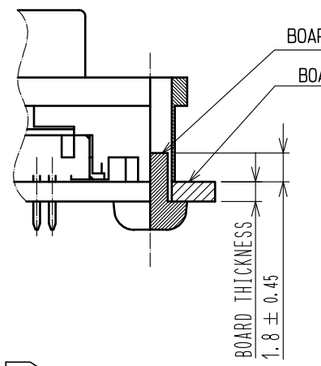

△1 1 PRODUCT - BOARD MOUNTED

△1 NOTES 1 This product must be screwed to the board.
Please prepare the screws by the customer.
<SCREW REQUIREMENTS>
NOMINAL DIAMETER: M2.6 x 0.45
SCREW LENGTH : 1.8 ± 0.45 + BOARD thickness 't'

HRS DRAWING FOR REFERENCE

NO.	MATERIAL	FINISH, REMARKS	NO.	MATERIAL	FINISH, REMARKS
3	PBT	UL94V-0(BLACK)	6	STEEL	NICKEL PLATING
2	PHOSPHOR BRONZE	SELECTIVE GOLD PLATING 0.2μm min	5	ZINC ALLOY DIE CASTING	NICKEL PLATING
1	PHOSPHOR BRONZE	SELECTIVE GOLD PLATING 0.2μm min	4	PBT	UL94V-0(BLACK)

UNITS	SCALE	COUNT	DESCRIPTION OF REVISIONS	DESIGNED	CHECKED	DATE
mm	2 : 1	△1 2	DIS-E-00010989	KG.OKITA	MN.KENJO	20220908

HRS HIROSE ELECTRIC CO., LTD.

APPROVED	: HO.MIWA	20050105	DRAWING NO.	EDC3-040144-01
CHECKED	: YH.ENAMI	20050105	PART NO.	DX20-36S(50)
DESIGNED	: TU.TANIGUCHI	20050105	CODE NO.	CL0230-0081-0-50 △1 1/1
DRAWN	: TU.TANIGUCHI	20050105		

FORM HC0011-5-7