May.1.2024 Copyright 2024 HIROSE ELECTRIC CO., LTD. All Rights Reserved.
In case of consideration for using Automotive equipment / device which demand high reliability, kindly contact our sales window correspondents.

	COUNT	DESCRIPTION OF REVISIONS	BY	CHKD	DATE		COUNT	DESCRIPTION OF REVISIONS	BY	CHKD	DATE
△					. .	△					. .
△					. .	△					. .
△					. .	△					. .

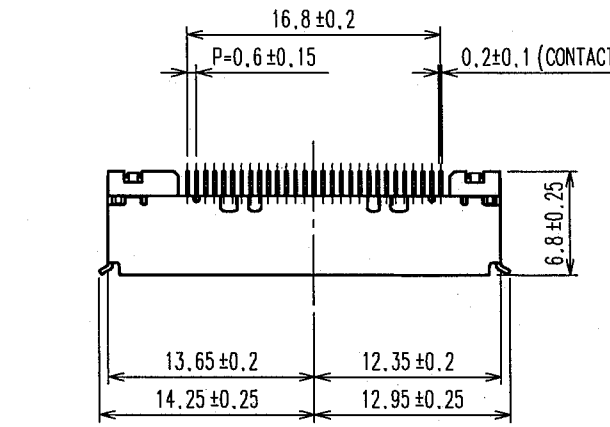

CUT SECTION OF MATED CONNECTOR(4:1)

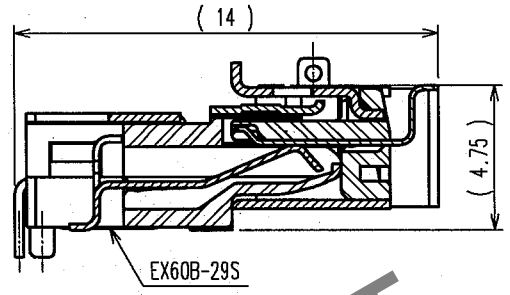

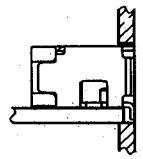

PANEL CUTOUT

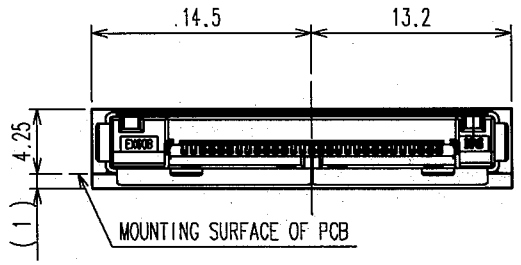

RECOMMENDED PCB PATTERN
(CONNECTOR MOUNTING SIDE)

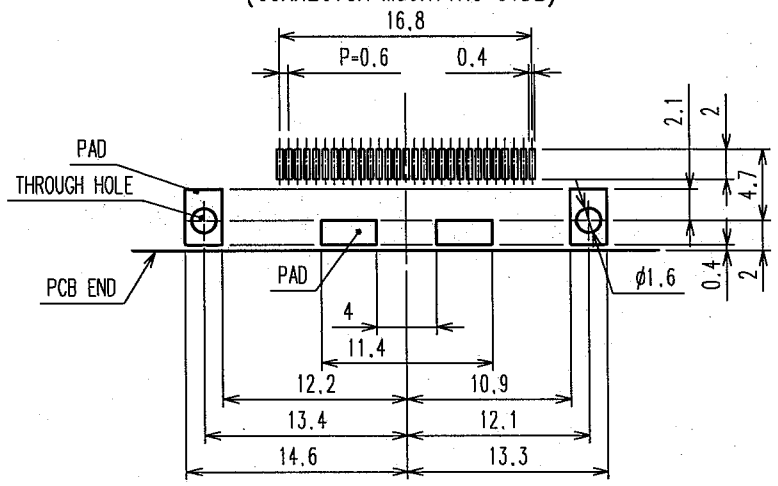

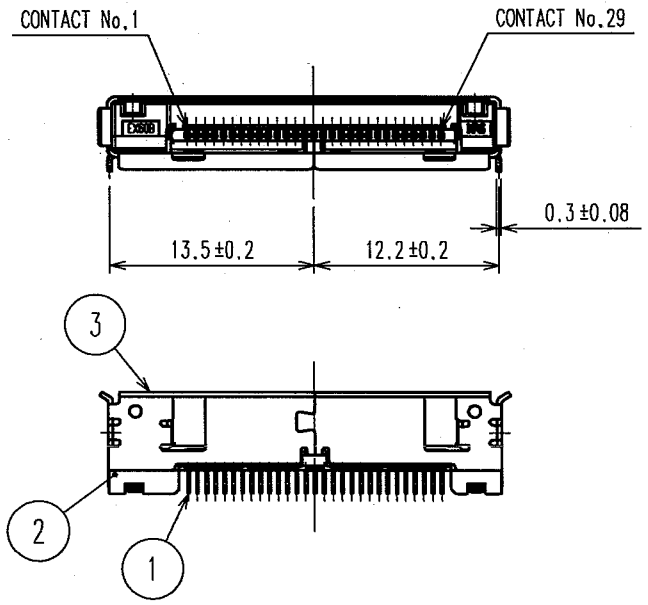

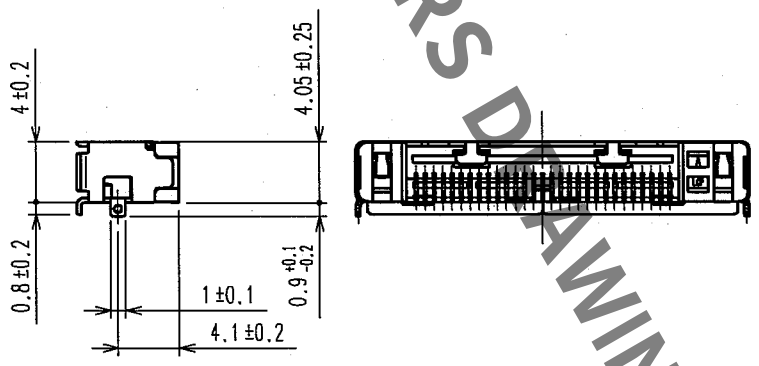

4 DRAWING FOR PACKING(FREE)

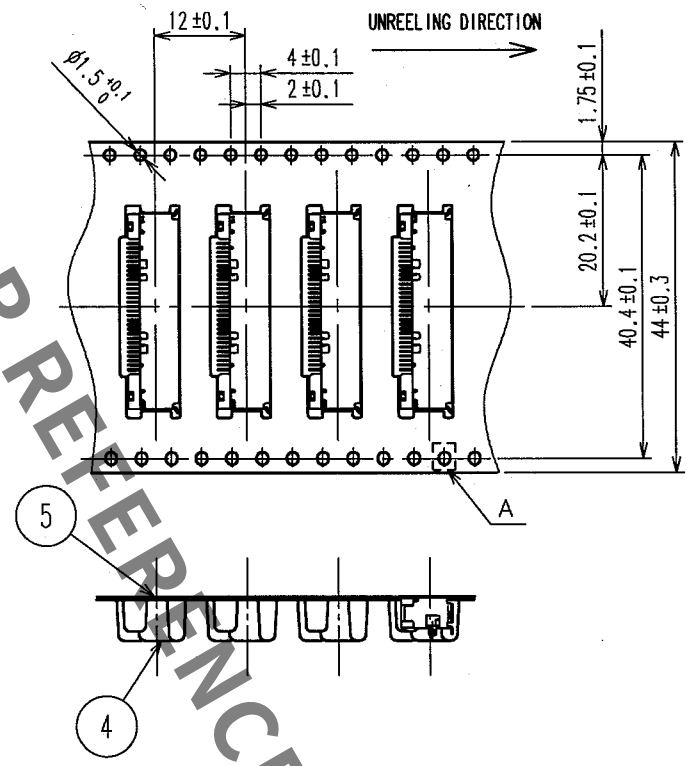

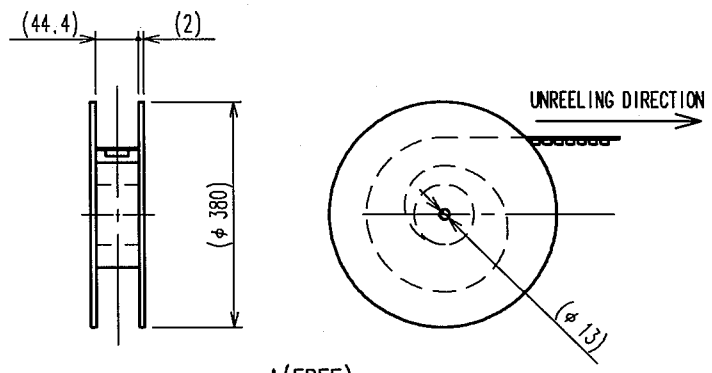

A(FREE)

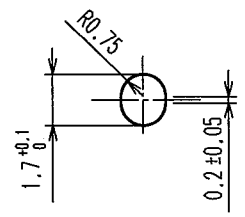

NOTE 1 APPRICABLE CONNECTOR:EX60B-29S(CL232-0613-0)
REFER TO THE DRAWING AND THE SPECIFICATION SHEET OF EX60B-29S
IN CASE OF USING THIS PRODUCT FOR A CRADLE DEVICE.
2 CONTACT CO-PLANARITY IS 0.1 MAX.
3 CONTACT PLATING SPECIFICATION
UNDER : NICKEL PLATING 1μm min
CONTACT : GOLD PLATING 0.2μm min
LEAD : GOLD FLASH PLATING
4 1REEL:1200 PIECES.

NO.	MATERIAL	FINISH, REMARKS	NO.	MATERIAL	FINISH, REMARKS
3	STAINLESS STEEL	NiP0.2μm min+SnP1μm min			
2	LCP	UL94V-0(BLACK)	5	PS	TOP COVER TAPE
1	COPPER ALLOY	3	4	PS	EMBOSSED CARRIER TAPE

CODE NO.(OLD)	DRAWN	DESIGNED	CHECKED	APPROVED	RELEASED
	N.Hirokawa 05.02.15	K.Hirokawa 05.02.15	S.Mitsuzaki 05.02.17	S.Mitsuzaki 05.02.17	. .

SCALE 2 : 1
UNITS mm

DRAWING NO. EDC3-124757

HRS HIROSE ELECTRIC CO., LTD

PART NO. EX60B-29P

CODE NO. CL232-0611-5 1/1

FORM NO.229

TO
Q

HRS DRAWING FOR REFERENCE