May.1.2024 Copyright 2024 HIROSE ELECTRIC CO., LTD. All Rights Reserved.
In case of consideration for using Automotive equipment / device which demand high reliability, kindly contact our sales window correspondents.

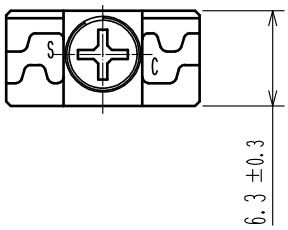

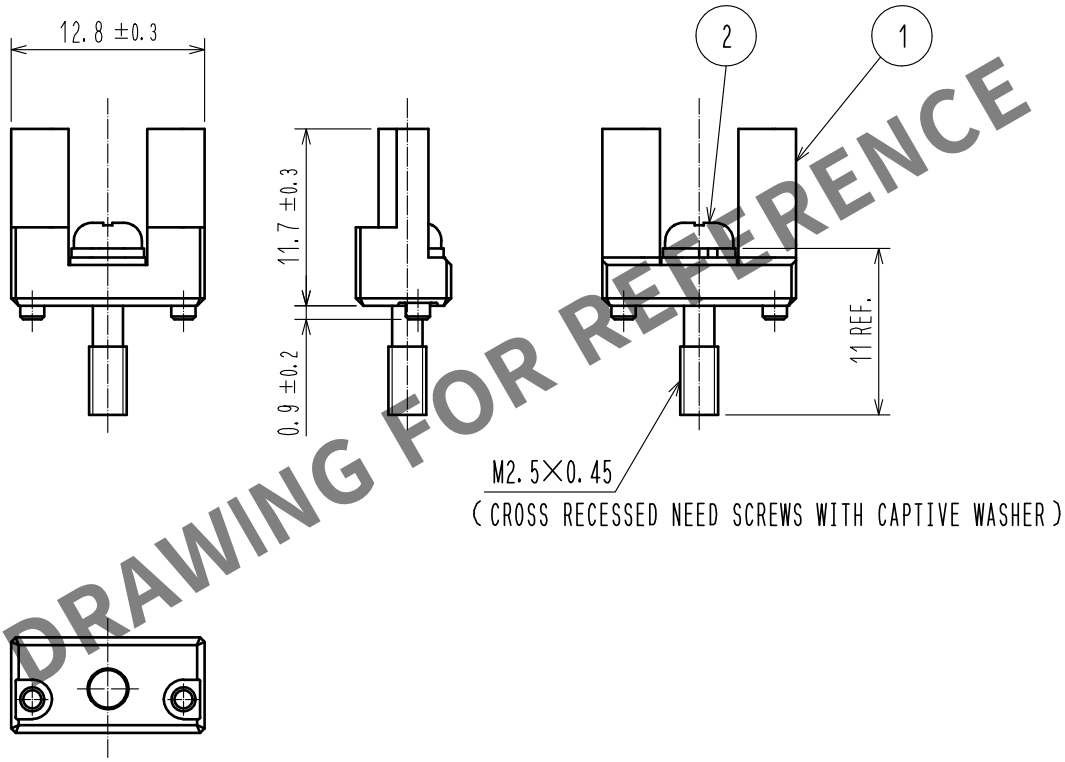

HRS DRAWING FOR REFERENCE

NOTE 1 . ONE PACKAGE CONSISTS OF 50 PCS.

NO.	MATERIAL	FINISH . REMARKS	NO.	MATERIAL	FINISH . REMARKS
1	ZINC ALLOY	NICKEL PLATING	2	STEEL	NICKEL PLATING

UNITS mm	SCALE 2 : 1	COUNT	DESCRIPTION OF REVISIONS	DESIGNED	CHECKED	DATE
		0				

HIROSE ELECTRIC CO., LTD.

APPROVED	: NM. NISHIMATSU	15. 05. 25
CHECKED	: NM. NISHIMATSU	15. 05. 25
DESIGNED	: MO. SHIMOYAMA	15. 05. 22
DRAWN	: MO. SHIMOYAMA	15. 05. 22

DRAWING NO.	EDC-128067-00-00
PART NO.	TJ-KY-SC
CODE NO.	CL236-3114-2-00

0 1/1

FORM HC0011-5-51