Mar.1.2024 Copyright 2024 HIROSE ELECTRIC CO., LTD. All Rights Reserved.
In case of consideration for using Automotive equipment / device which demand high reliability, kindly contact our sales window correspondents.

RECOMMENDED PANEL CUTOUT(4:1)

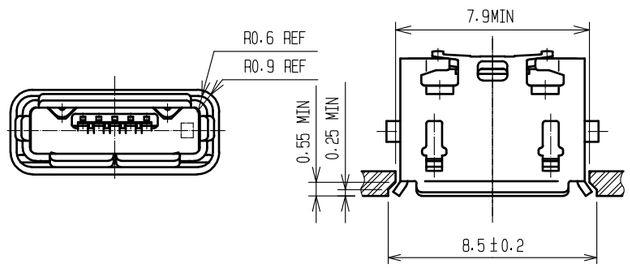

RECOMMENDED PATTERN

GENERAL TOLERANCE IS ±0.05

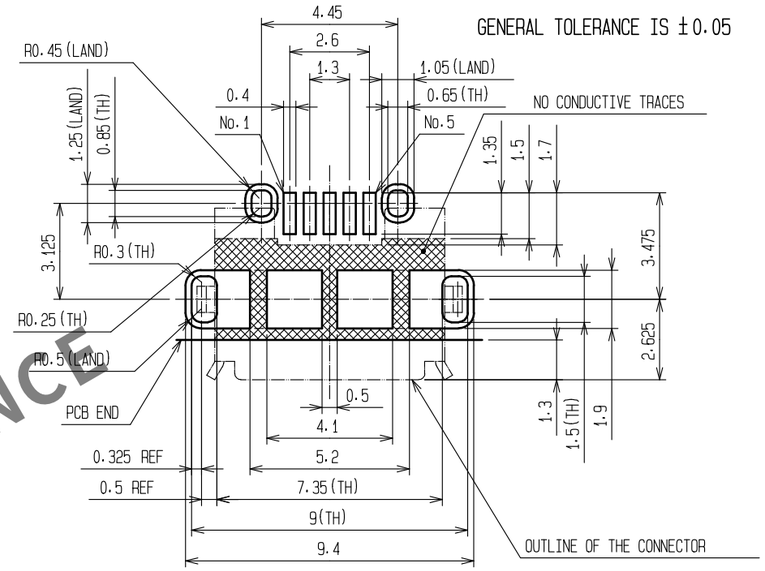

MATED WITH CORRESPONDING PLUG(4:1)

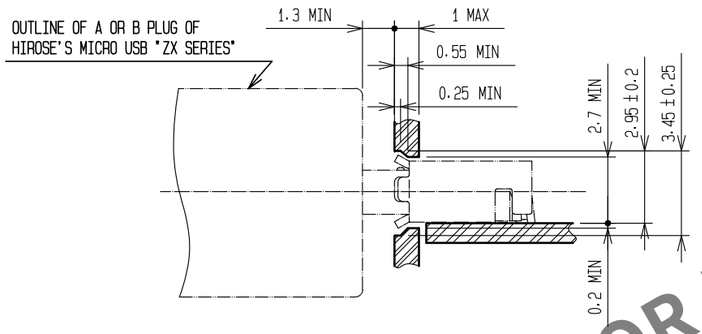

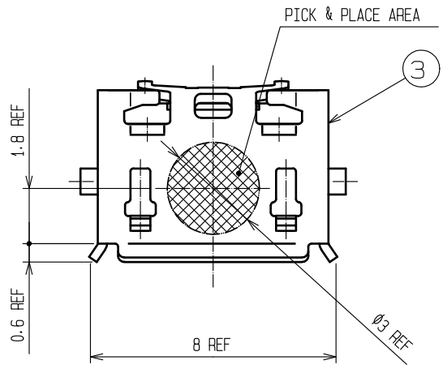

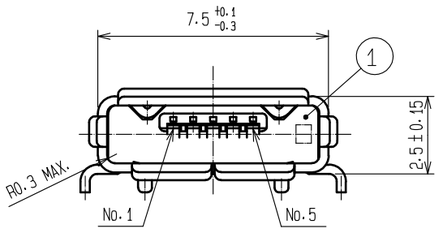

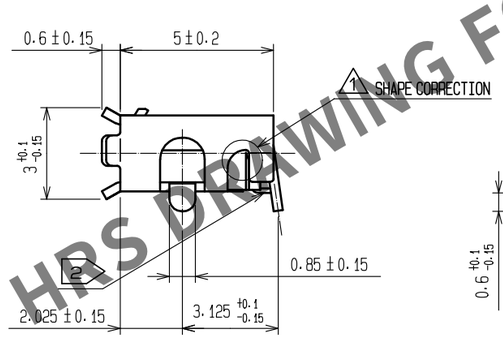

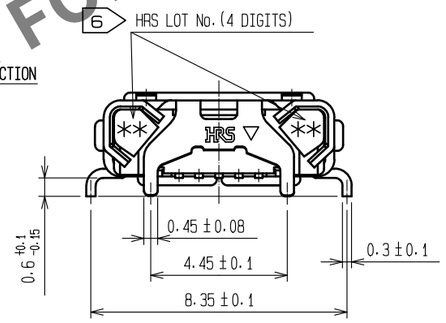

RECOMMENDED METAL MASK OPENING

RECOMMENDED METAL MASK THICKNESS
:t=0.10

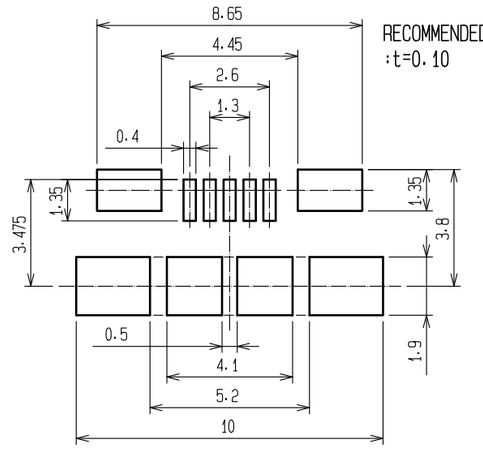

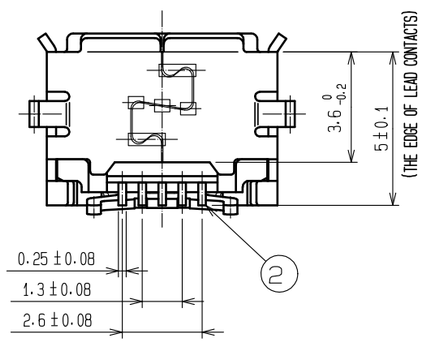

NOTES
1 INTERFACE DIMENSIONS CONFORMS TO USB2.0 SPECIFICATION.
2 CO-PLANARITY IS WITHIN 0.08mm.
3 PLATING
CONTACT AREA : GOLD 0.75μm MIN.
LEAD AREA : GOLD 0.05μm MIN.
UNDER PLATING: NICKEL 2μm MIN.
4 PER REEL : 2000 pcs.
5 AS FOR PART No.3, THE PERFORMANCE REMAINS GOOD EVEN IF THERE IS A RUBBING WOUND BY THE ASSEMBLY PROCESS. AND THE PERFORMANCE REMAINS GOOD EVEN IF THERE IS A DIFFERENCE OF THE COLOR OF PLATING WITH THE MANUFACTURING LOT.
6 CODE CONFIGURATION IS SHOWN IN FIG.1.

NO.	MATERIAL	FINISH , REMARKS
2	COPPER ALLOY	3
1	LCP	COLOR GRAY UL94V-0

NO.	MATERIAL	FINISH , REMARKS
5	PE	
4	PS	
3	STAINLESS STEEL	UNDER PLATING : NICKEL MOUNTING AREA : TIN LUBRICANT

UNITS	SCALE	COUNT	DESCRIPTION OF REVISIONS	DESIGNED	CHECKED	DATE
mm	5 : 1	1	DIS-E-00001951	SH. KOYAMA	TU. TANIGUCHI	20181129

HRS HIROSE ELECTRIC CO., LTD.

APPROVED	NM. NISHIMATSU	20151027	DRAWING NO.	EDC-126264-30-00
CHECKED	KN. ICHIKAWA	20151027	PART NO.	ZX62D-AB-5P8(30)
DESIGNED	TS. ITO	20151027	CODE NO.	CL242-0027-5-30
DRAWN	AK. AKIYAMA	20151027		1/2

HRS DRAWING FOR REFERENCE

Mar.1.2024 Copyright 2024 HIROSE ELECTRIC CO., LTD. All Rights Reserved.
In case of consideration for using Automotive equipment / device which demand high reliability, kindly contact our sales window correspondents.

4 PACKING DETAIL(FREE)

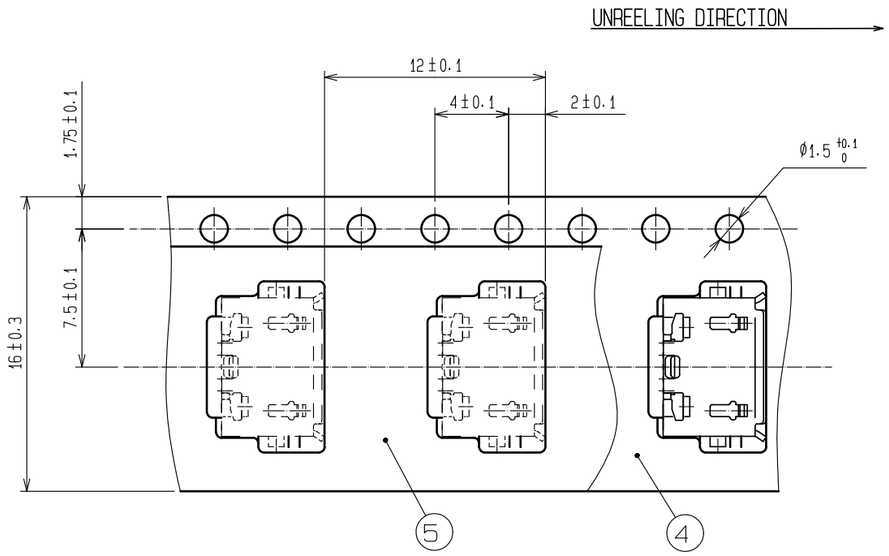

REEL(FREE)

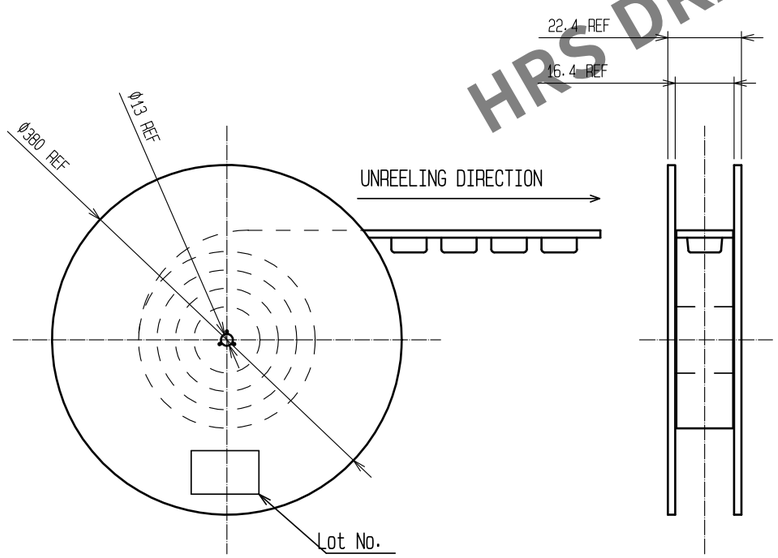

6 FIG-1 LOT CODE CONFIGRATIONS FOR 4 DIGITS

YEAR		MONTH		DAY						LINE No.	
YEAR	CODE	MONTH	CODE	DAY	CODE	DAY	CODE	DAY	CODE	LINE No.	CODE
2007	7	Jan.	A	1	1	11	B	21	M	1	A
2008	8	Feb.	B	2	2	12	C	22	N	2	B
2009	9	Mar.	C	3	3	13	D	23	P	3	C
2010	0	Apr.	D	4	4	14	E	24	Q	4	D
2011	1	May.	E	5	5	15	F	25	R	5	E
		Jun.	F	6	6	16	G	26	S	6	F
		Jul.	G	7	7	17	H	27	T	7	G
		Aug.	H	8	8	18	J	28	U	8	H
		Sep.	I	9	9	19	K	29	V	9	I
		Oct.	J	10	A	20	L	30	W	10	J
		Nov.	K					31	X	11	K
		Dec.	L								

HRS DRAWING FOR REFERENCE

HRS	DRAWING NO.	EDC-126264-30-00
	PART NO.	ZX62D-AB-5P8(30)
	CODE NO.	CL242-0027-5-30 △1 2/2