Apr.1.2024 Copyright 2024 HIROSE ELECTRIC CO., LTD. All Rights Reserved.
In case of consideration for using Automotive equipment / device which demand high reliability, kindly contact our sales window correspondents.

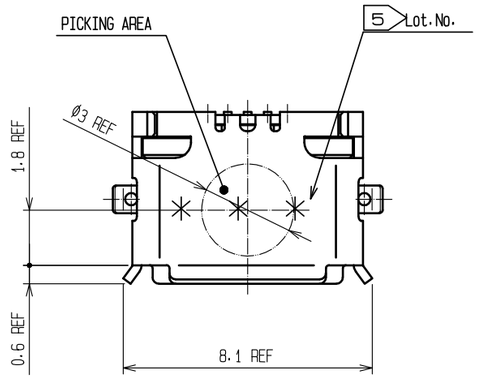

RECOMMENDED PANEL CUTOUT (4:1)

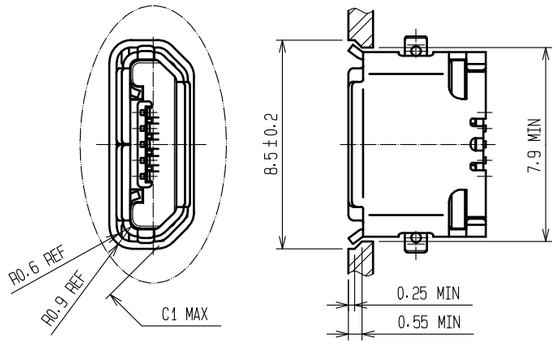

MATED WITH CORRESPONDING PLUG (4:1)

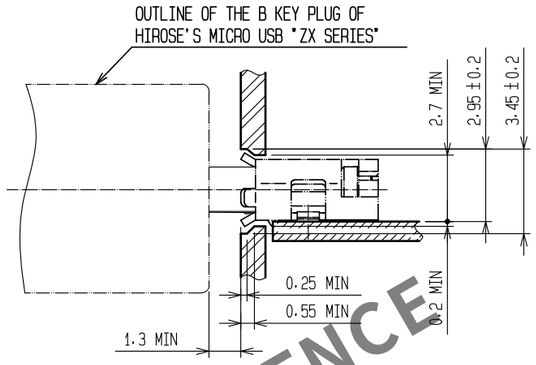

PCB LAYOUT

(GENERAL TOLERANCE IS ±0.05mm)

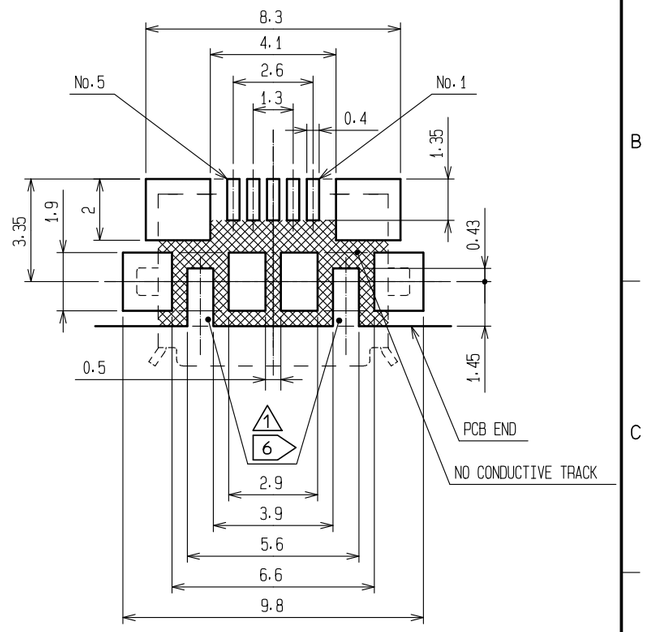

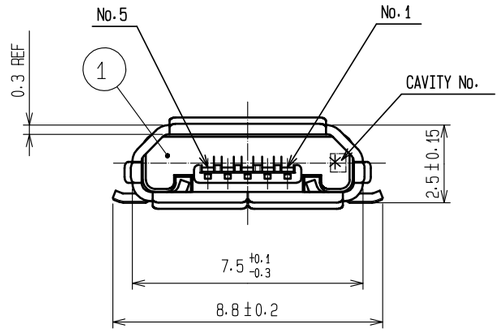

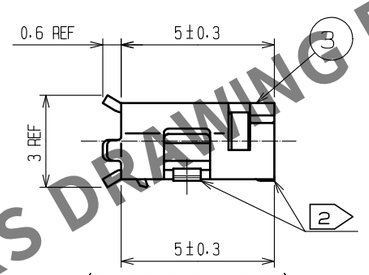

(THE EDGE OF LEAD CONTACTS)

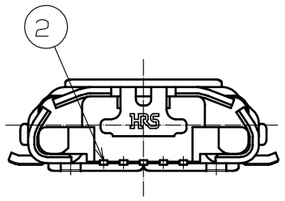

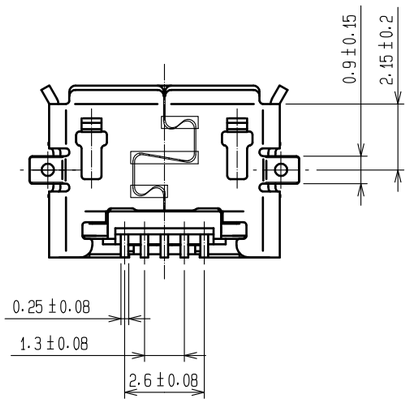

NOTES 1 INTERFACE DIMENSIONS CONFORM TO USB2.0 SPECIFICATION.

2 CO-PLANARITY IS WIRHIN 0.08 mm.

3 PLATING
CONTACT AREA : GOLD 0.75 μm MIN.
LEAD AREA : GOLD 0.05 μm MIN.
UNDER PLATING : NICKEL 2 μm MIN.

4 PER REEL : 2000 PCS.

5 CODE CONFIGURATION IS SHOWN IN FIG.1

1 6 PCB CUTOUTS ARE NECESSARY TO PREVENT THE LOCK FROM HITTING THE PCB WHEN MATING PLUG.

HRS DRAWING FOR REFERENCE

NO.	MATERIAL	FINISH , REMARKS	NO.	MATERIAL	FINISH , REMARKS
			5	PE	
2	COPPER ALLLOY	3	4	PS	
1	LCP	BLACK , UL94V-0	3	STAINLESS STEEL	TIN PLATING 1 μm MIN. LUBRICANT

UNITS	SCALE		COUNT	DESCRIPTION OF REVISIONS	DESIGNED	CHECKED	DATE
mm	5 : 1	1	2	DIS-E-00011746	KIM JAEHYEON	KG.OKITA	20221122

HRS HIROSE ELECTRIC CO., LTD.

APPROVED	: NM. NISHIMATSU	20151027	DRAWING NO.	EDC-126271-30-00
CHECKED	: KN. ICHIKAWA	20151027	PART NO.	ZX62R-B-5P(30)
DESIGNED	: TS. ITO	20151027		
DRAWN	: AK. AKIYAMA	20151027	CODE NO.	CL0242-0028-8-30

1 1/2

FORM HC0011-5-7

Apr.1.2024 Copyright 2024 HIROSE ELECTRIC CO., LTD. All Rights Reserved.
In case of consideration for using Automotive equipment / device which demand high reliability, kindly contact our sales window correspondents.

4 DRAWING FOR PACKING (2:1)

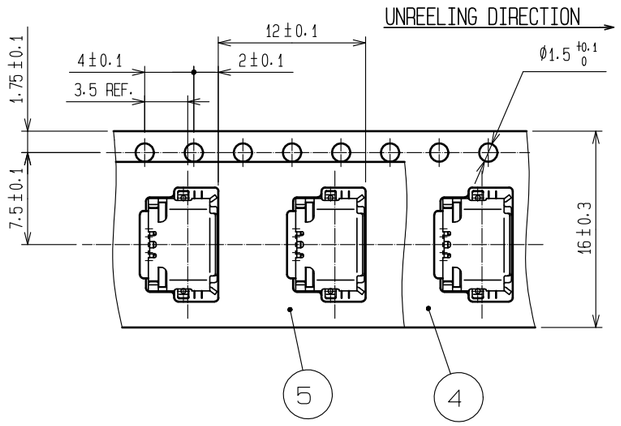

5 Fig.1 LOT CODE CONFIGURATION FOR 3 DIGITS

YEAR		MONTH		DAY					
YEAR	CODE	MONTH	CODE	DAY	CODE	DAY	CODE	DAY	CODE
2007	7	Jan.	A	1	1	11	B	21	M
2008	8	Feb.	B	2	2	12	C	22	N
2009	9	Mar.	C	3	3	13	D	23	P
2010	0	Apr.	D	4	4	14	E	24	Q
2011	1	May.	E	5	5	15	F	25	R
		Jun.	F	6	6	16	G	26	S
		Jul.	G	7	7	17	H	27	T
		Aug.	H	8	8	18	J	28	U
		Sep.	I	9	9	19	K	29	V
		Oct.	J	10	A	20	L	30	W
		Nov.	K					31	X
		Dec.	L						

HRS DRAWING FOR REFERENCE

REEL(FREE)

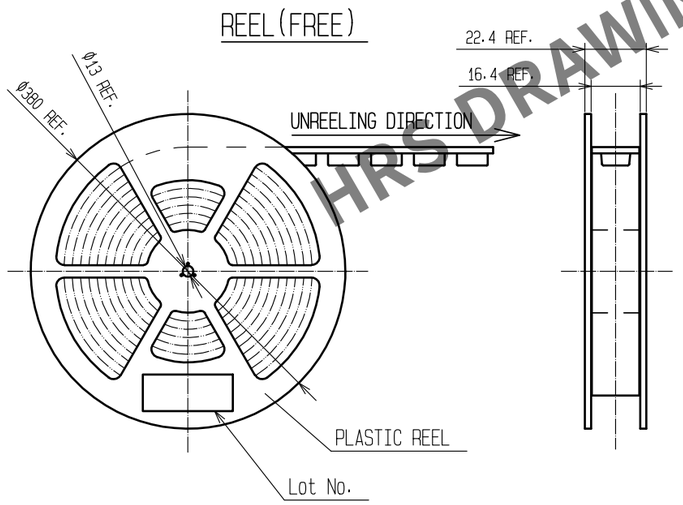

HRS	DRAWING NO.	EDC-126271-30-00
	PART NO.	ZX62R-B-5P(30)
	CODE NO.	CL0242-0028-8-30

1 2/2