Apr.1.2024 Copyright 2024 HIROSE ELECTRIC CO., LTD. All Rights Reserved.
In case of consideration for using Automotive equipment / device which demand high reliability, kindly contact our sales window correspondents.

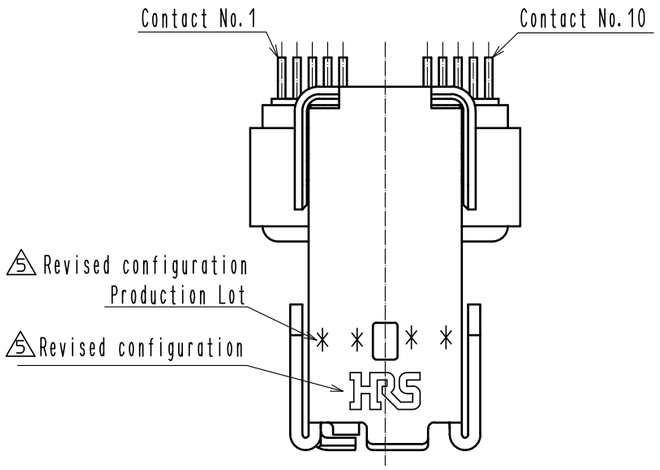

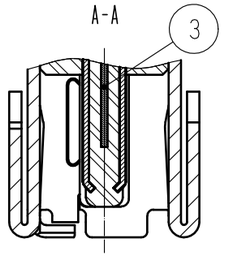

Notes. 1 Co-planarity is within 0.1 mm.

2. As for part No.5 the performance remains good even if there are rubbing wounds by the assembly process.
And the perfomance remains good though there might be a difference inthe pating luster beteween each plating lots.

3 Per reel : 400 pcs.

4 Refer to the mated condition diagram for the panel thickness and layout.

5. This produt is mounted by reflow soldering.
Refer to specification sheet ELC-129430-00-00 for reflow soldering.

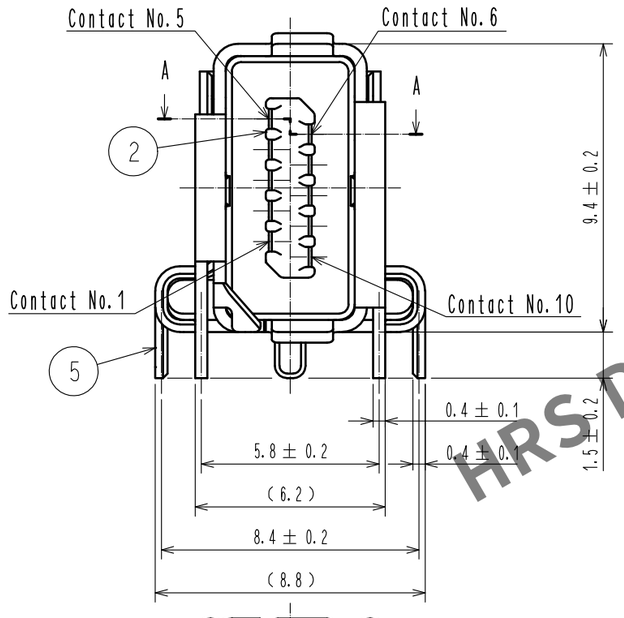

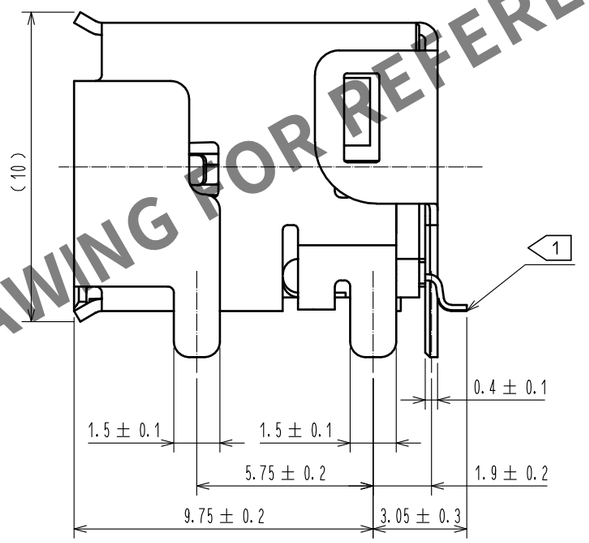

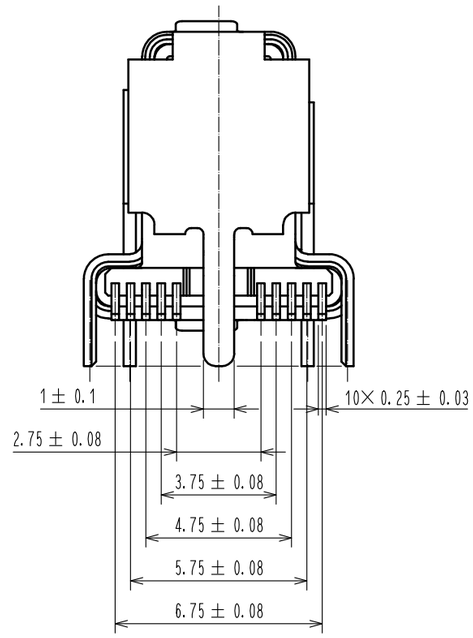

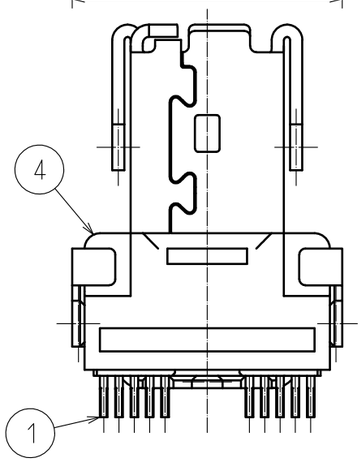

HRS DRAWING FOR REFERENCE

NO.	MATERIAL	FINISH , REMARKS
3	Stainless Steel	
2	LCP	Gray、UL94V-0
1	Copper Alloy	Contact area : Gold 0.2 μm min. Lead area : Gold 0.03 μm min. Under plating : Nickel 2 μm min.

NO.	MATERIAL	FINISH , REMARKS
7	PE	
6	PS	
5	Stainless Steel	Surface : Tin 1 μm min. Under plating : Nickel 0.2 μm min.
4	LCP	Gray、UL94V-0

UNITS	SCALE		COUNT	DESCRIPTION OF REVISIONS	DESIGNED	CHECKED	DATE
mm	5 : 1	5	3	DIS-E-00003272	KI. KAGOTANI	MN. KENJO	20200925

HIROSE ELECTRIC CO., LTD.

APPROVED	: RI. TAKAYASU	20170328	DRAWING NO.	EDC-129430-00-00
CHECKED	: KI. NAGANUMA	20170327	PART NO.	IX61G-A-10P
DESIGNED	: TS. SAKAIZAWA	20170327	CODE NO.	CL251-0021-0-00
DRAWN	: TS. SAKAIZAWA	20170327		5 1/3

FORM HC0011-5-7

Apr.1.2024 Copyright 2024 HIROSE ELECTRIC CO., LTD. All Rights Reserved.
In case of consideration for using Automotive equipment / device which demand high reliability, kindly contact our sales window correspondents.

Mated Condition (Free)

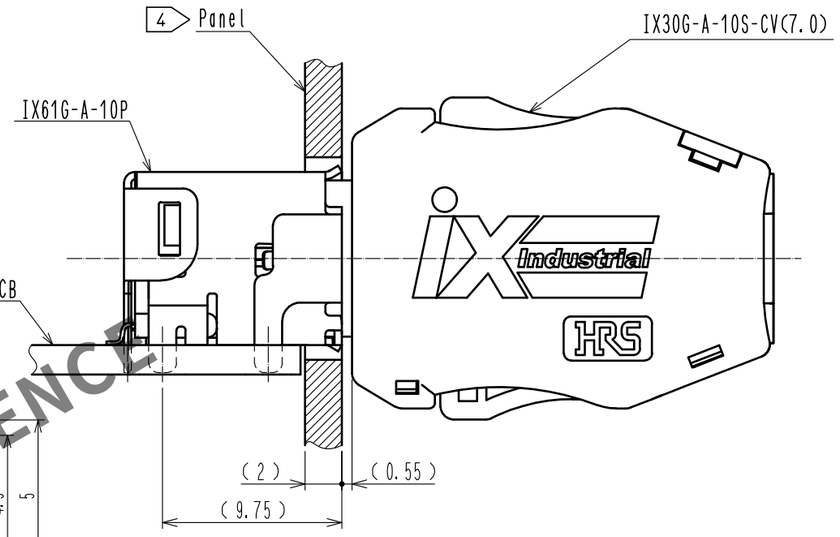

Reference PCB Layout (Connector Mounting Side) (t = 1.6)

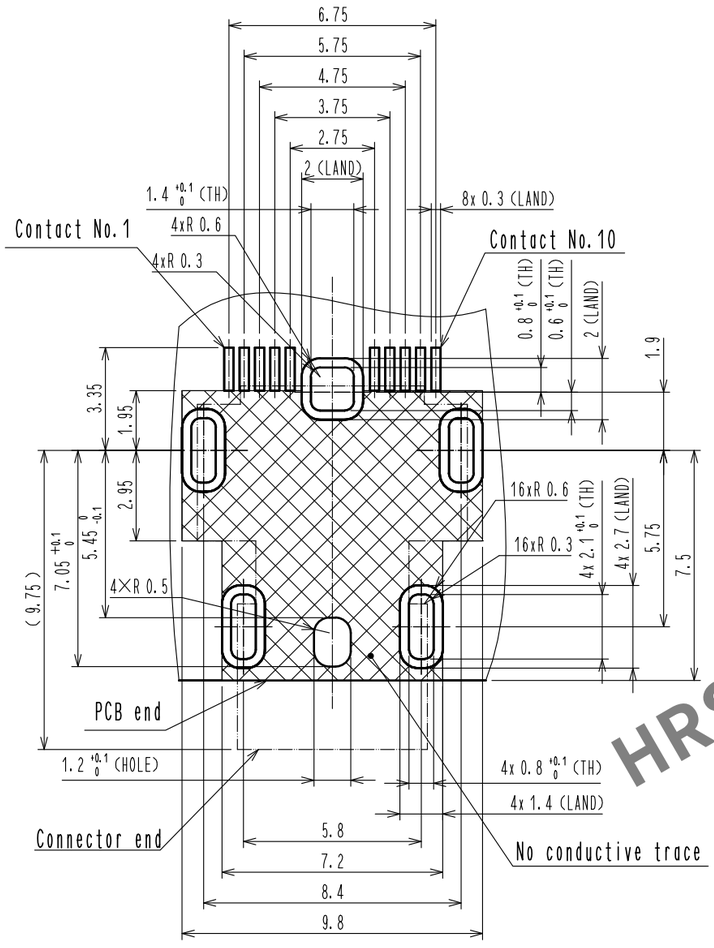

General tolerance is +/- 0.05

6 Reference Metal Mask Layout (t = 0.15)

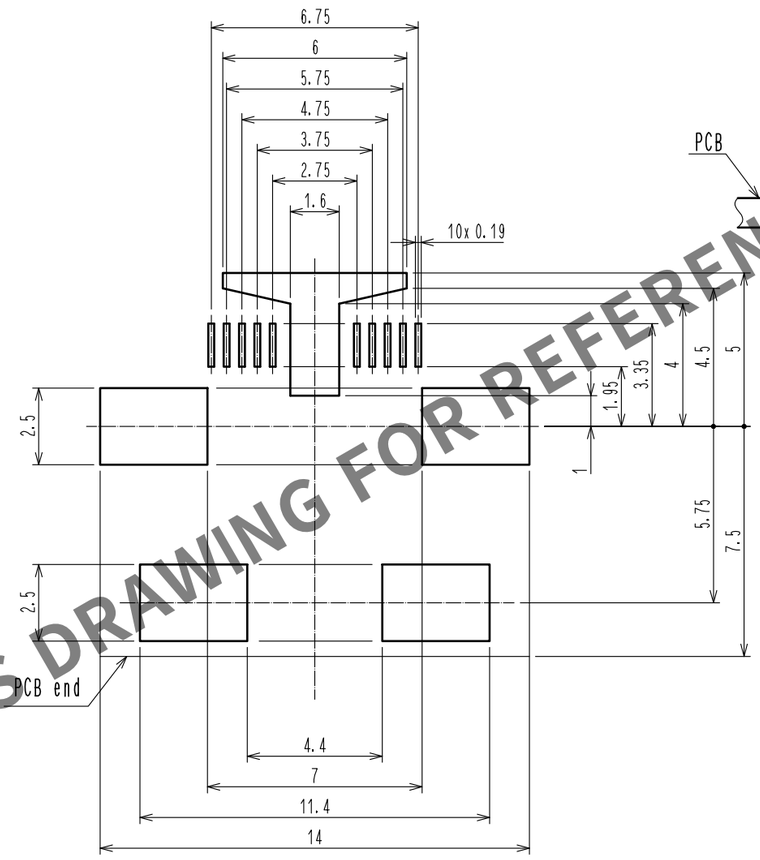

General tolerance is +/- 0.02

4 Reference Dimensions of Panel Cutout (Free)

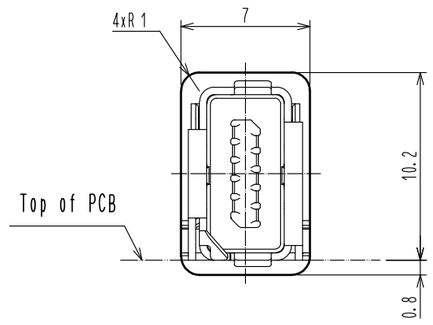

Dimension is reference.

HRS DRAWING FOR REFERENCE

6 Thickness of metal mask is 0.1 mm min.
Metal mask dimensions of the drawings described, are reference dimensions for 0.15 mm thickness metal mask.
Change the metal mask dimensions by thickness of the metal mask, thickness of PCB, component of solder paste and mounting conditions.
Change the metal mask dimensions in case of mounting IX61G-*-10P in parallel.
Change the metal mask dimensions, if there are other mounting parts or implementation pattern around the portion of mounting position of IX61G-*-10P.
Refer to the technical specification (ETAD-E3170-00) for different variations of the metal mask pattern width.

HRS	DRAWING NO.	EDC-129430-00-00
	PART NO.	IX61G-A-10P
	CODE NO.	CL251-0021-0-00

5 2/3

Apr.1.2024 Copyright 2024 HIROSE ELECTRIC CO., LTD. All Rights Reserved.
In case of consideration for using Automotive equipment / device which demand high reliability, kindly contact our sales window correspondents.

3 Drawing for packing (Free)

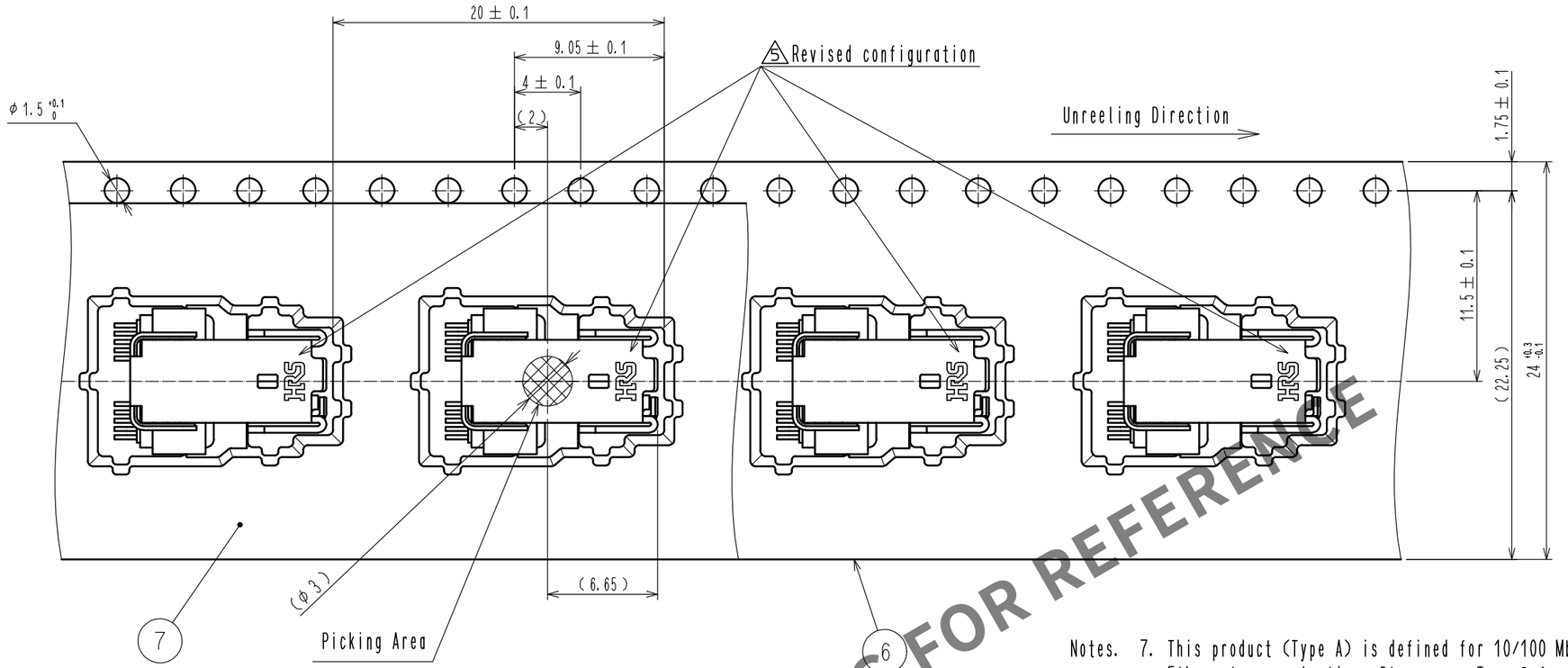

HRS DRAWING FOR REFERENCE

Notes. 7. This product (Type A) is defined for 10/100 Mbit/s and 1/10 Gbit/s Ethernet communication. Please use Type B for all other non Ethernet applications like signaling, serial or other industrial bus communication systems.

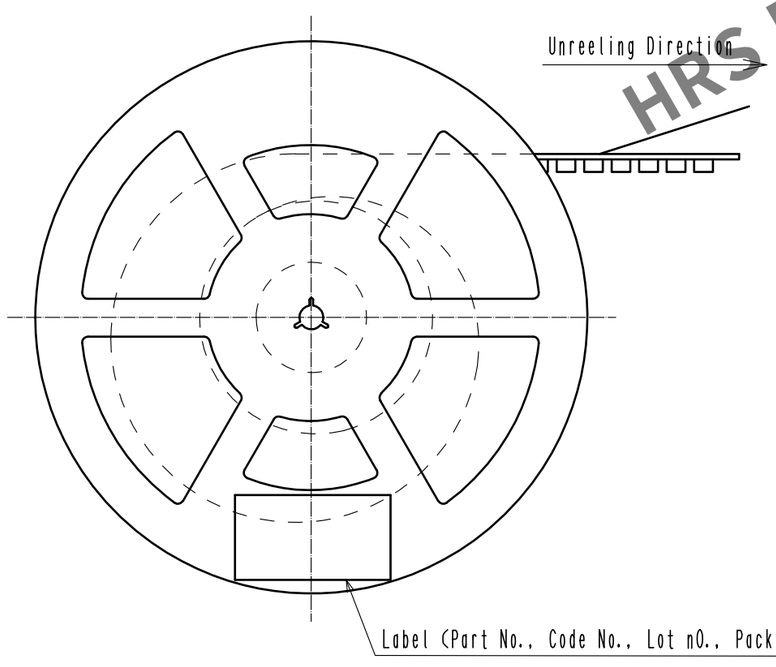

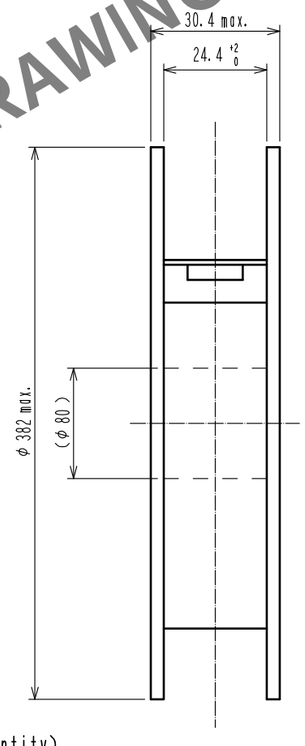

Mating Shape

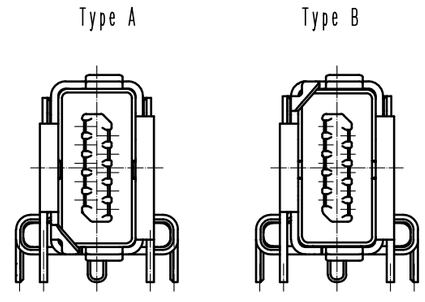

Pin Assignment For 10/100 Mbit/s And 1/10 Gbit/s Ethernet

Contact No.	Signal	
	10/100 Mbit/s	1/10 Gbit/s
1	TX+	BI_DA+
2	TX-	BI_DA-
3	N.C	GND
4	N.C	BI_DC+
5	N.C	BI_DC-
6	RX+	BI_DB+
7	RX-	BI_DB-
8	N.C	GND
9	N.C	BI_DD+
10	N.C	BI_DD-

HRS	DRAWING NO.	EDC-129430-00-00
	PART NO.	IX61G-A-10P
	CODE NO.	CL251-0021-0-00
	5	3/3