Apr.1.2024 Copyright 2024 HIROSE ELECTRIC CO., LTD. All Rights Reserved.
In case of consideration for using Automotive equipment / device which demand high reliability, kindly contact our sales window correspondents.

Notes. 1. Recommended cable condition is shown below.
△1 A list of compatible cables is available on the Hirose website.
When using a non-recommended cable, please contact a Hirose sales representative.
Refer to the technical specification (ETAD-E3222) for wiring and assembly procedures.

△1 Recommended Cable △1

Items	Recommended Condition
Conductor size	AWG # 28-22
Insulation O.D.	φ 1.55 mm MAX.
Braid Shield	Tin plating
Sheath O.D.	φ 6.3 -7.2 mm

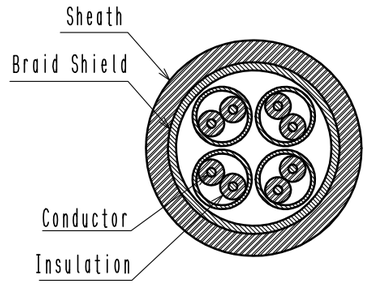

2. This product (Type B) is used for non Ethernet applications
like signaling, serial or other industrial bus communication systems.
Please use Type A for 10/100 Mbit/s and 1/10 Gbit/s Ethernet communication.

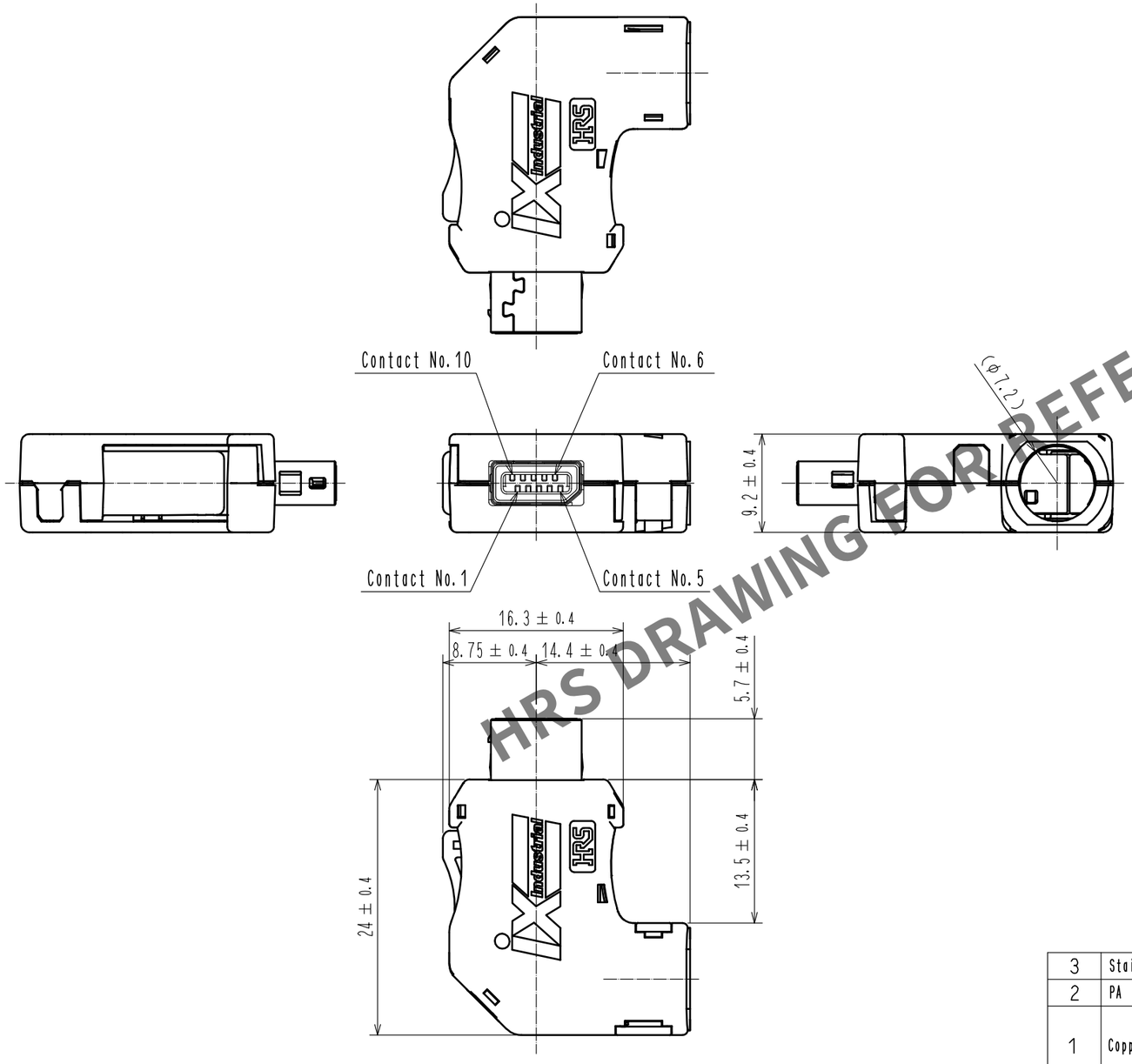

△1 Mating Key

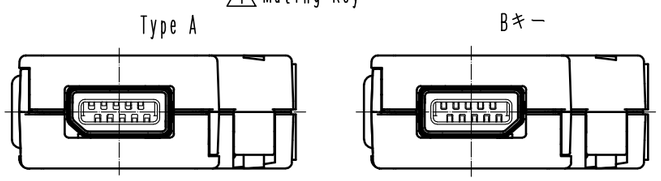

△1 △3 Excluding the plug unit, this product is packaged separately by the type of parts.
The shield shell is packaged prior to bending.(See next page.)
Refer to the technical specification (ETAP-E3224) for packing.

HRS DRAWING FOR REFERENCE

NO.	MATERIAL	FINISH , REMARKS	NO.	MATERIAL	FINISH , REMARKS
3	Stainless Steel		8	PC	Dark gray, UL94V-0
2	PA	Black, UL94V-0	7	PC	Dark gray, UL94V-0
1	Copper Alloy	Contact area : Palladium-Nickel 0.75 μm min + Gold 0.05 μm min Wiring area : Gold 0.03 μm min Under plating : Nickel 2 μm min	6	Stainless Steel	Nickel 0.2 μm min
			5	Stainless Steel	Nickel 1μm min
			4	PA	Black, UL94V-0

UNITS	SCALE		COUNT	DESCRIPTION OF REVISIONS	DESIGNED	CHECKED	DATE
mm	2 : 1	△1	6	DIS-E-00006884	MT. YASUDA	KI. KAGOTANI	20210929

HRS HIROSE ELECTRIC CO., LTD.

APPROVED	: MN. KENJO	20200601	DRAWING NO.	EDC-129990-01-00
CHECKED	: KI. NAGANUMA	20200601	PART NO.	IX40G-B-10S-CVL2(7.0)(01)
DESIGNED	: MT. YASUDA	20200601	CODE NO.	CL0251-0078-0-01 △1 1/2
DRAWN	: MY. KOMUKAI	20200601		

Apr.1.2024 Copyright 2024 HIROSE ELECTRIC CO., LTD. All Rights Reserved.
In case of consideration for using Automotive equipment / device which demand high reliability, kindly contact our sales window correspondents.

3 Shield Shell Delivery Form

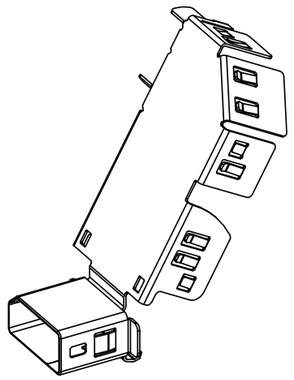

3 Product Structure

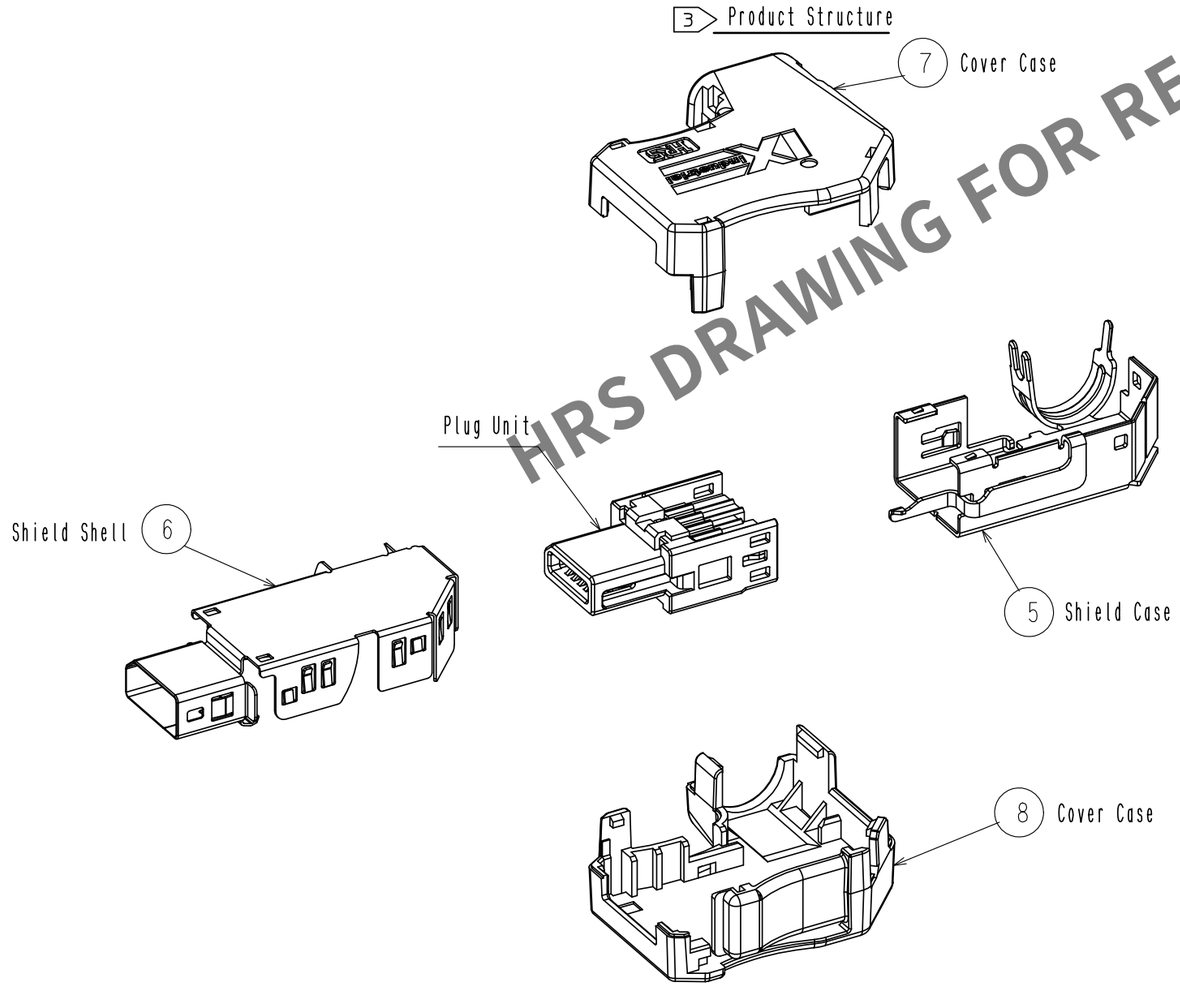

HRS DRAWING FOR REFERENCE

Plug Unit

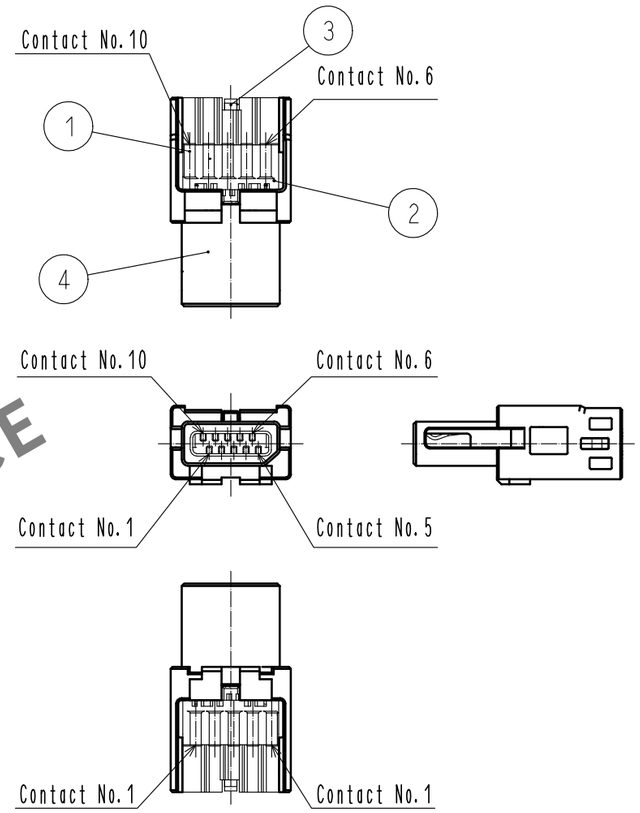

1 Mated Condition

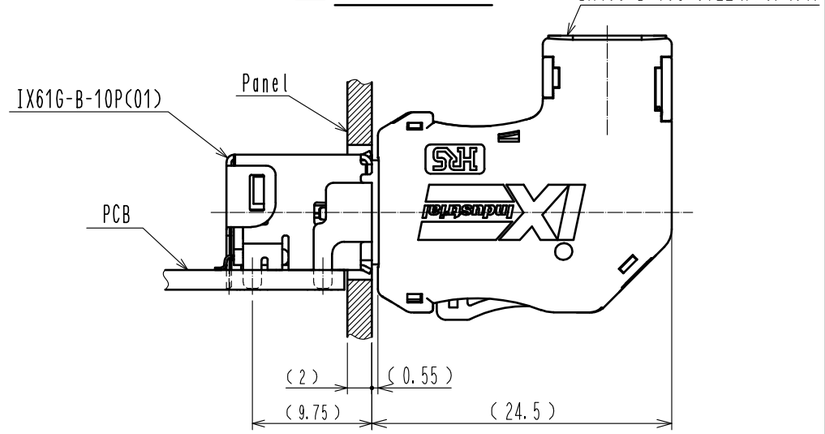

HRS	DRAWING NO.	EDC-129990-01-00
	PART NO.	IX40G-B-10S-CVL2(7.0)(01)
	CODE NO.	CL0251-0078-0-01

1 2/2

FORM HC0011-5-8