May.1.2024 Copyright 2024 HIROSE ELECTRIC CO., LTD. All Rights Reserved.
In case of consideration for using Automotive equipment / device which demand high reliability, kindly contact our sales window correspondents.

△1 Redraw

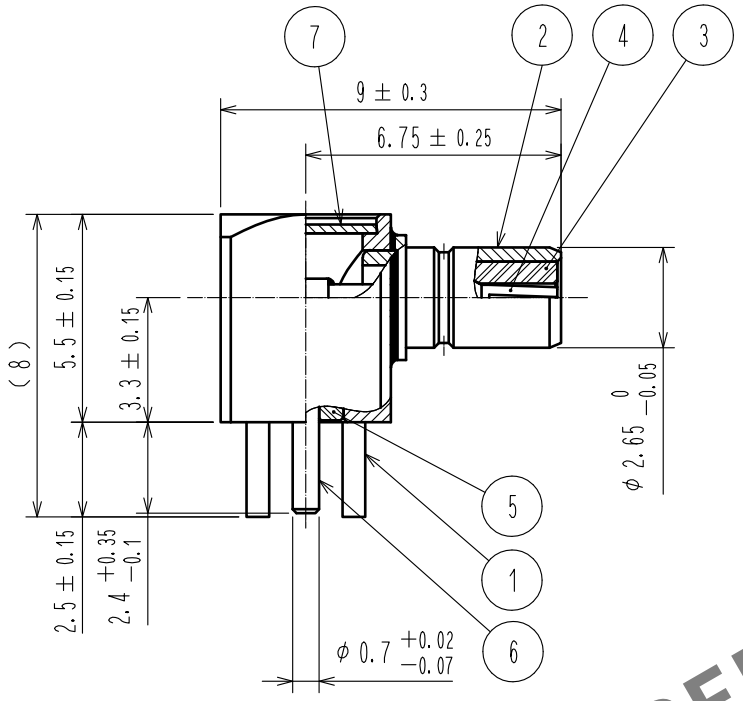

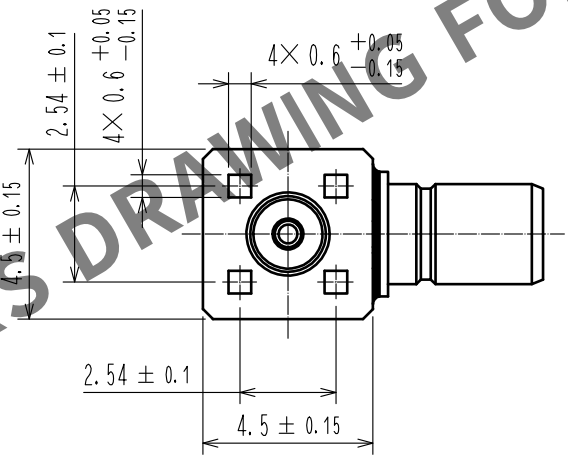

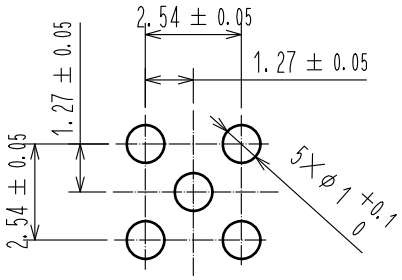

Recommended PCB hole pattern

HRS DRAWING FOR REFERENCE

RoHS COMPLIANT

NO.	MATERIAL	FINISH . REMARKS	NO.	MATERIAL	FINISH . REMARKS
4	BERYLLIUM COPPER	GOLD PLATING			
3	PTFE		7	BRASS	NICKEL PLATING
2	BRASS	GOLD PLATING	6	BRASS	GOLD PLATING
1	BRASS	GOLD PLATING	5	PTFE	

UNITS	SCALE		COUNT	DESCRIPTION OF REVISIONS	DESIGNED	CHECKED	DATE
mm	5 : 1	△1	1	DIS-D-00002722	NK. OOSAWA	TO. KATAYAMA	17.12.13

HIROSE ELECTRIC CO., LTD.

APPROVED	MH. YAMANE	13.05.13
CHECKED	NK. NINOMIYA	13.05.13
DESIGNED	MS. MATSUMOTO	13.05.11
DRAWN	MS. MATSUMOTO	13.05.11

DRAWING NO. EDC-009413-40-40
PART NO. P06-LR-PC(40)
CODE NO. CL328-0012-0-40
△1 1/1

FORM HC0011-5-51