	COUNT	DESCRIPTION OF REVISIONS	BY	CHKD	DATE		COUNT	DESCRIPTION OF REVISIONS	BY	CHKD	DATE
1	1	RE-D-03539	K.I	IM	99.8.23						. .
					. .						. .
					. .						. .

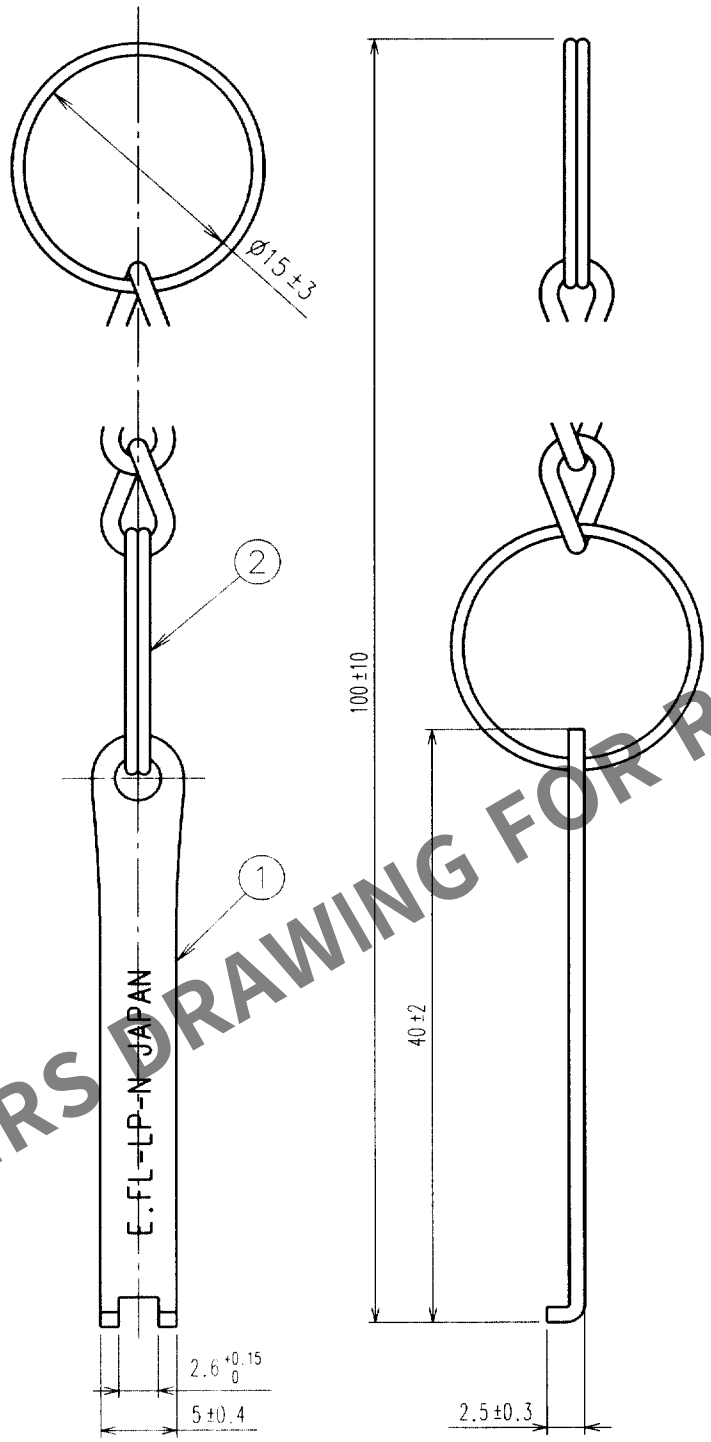

NOTES

1. THIS JIG IS FOR WITHDRAWING E.FL-LP AND U.FL-LP CONNECTOR. L-SHAPED BENDING PORTION OF THIS JIG SHALL BE INSERTED INTO CONNECTOR AND HOOKED ON THE CONNECTOR CAP AND WITHDRAWN.

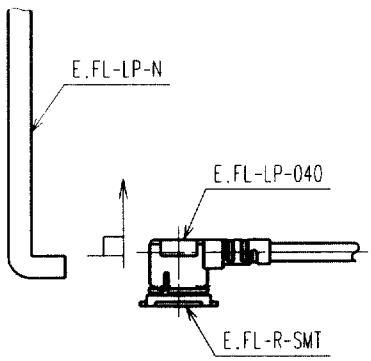

2. ONE EXAMPLE OF SHAPE OF CHAIN, REF. No. IS SHOWN.

HRS DRAWING FOR REFERENCE

NO.	MATERIAL	FINISH, REMARKS	NO.	MATERIAL	FINISH, REMARKS
1	STAINLESS STEEL	PASSIVATE	2	STEEL	NICKEL PLATED

CODE NO. (OLD)	DRAWN	DESIGNED	CHECKED	APPROVED	RELEASED
CL	T.KOMATU 95. 3 .28	K.IKEDA 95. 3 .29	I.MITANI 95. 3 .29	F.KOBAYASI 95. 3 .30	

SCALE 2 : 1
UNITS mm

DRAWING NO. EDC4-130574

PART NO. E.FL-LP-N

HRS HIROSE ELECTRIC CO.,LTD.

CODE NO. CL331-0441-9

1/1

FORM NO.228

TO
RF

Apr.1.2024 Copyright 2024 HIROSE ELECTRIC CO., LTD. All Rights Reserved.
In case of consideration for using Automotive equipment / device which demand high reliability, kindly contact our sales window correspondents.