Apr.1.2024 Copyright 2024 HIROSE ELECTRIC CO., LTD. All Rights Reserved.
In case of consideration for using Automotive equipment / device which demand high reliability, kindly contact our sales window correspondents.

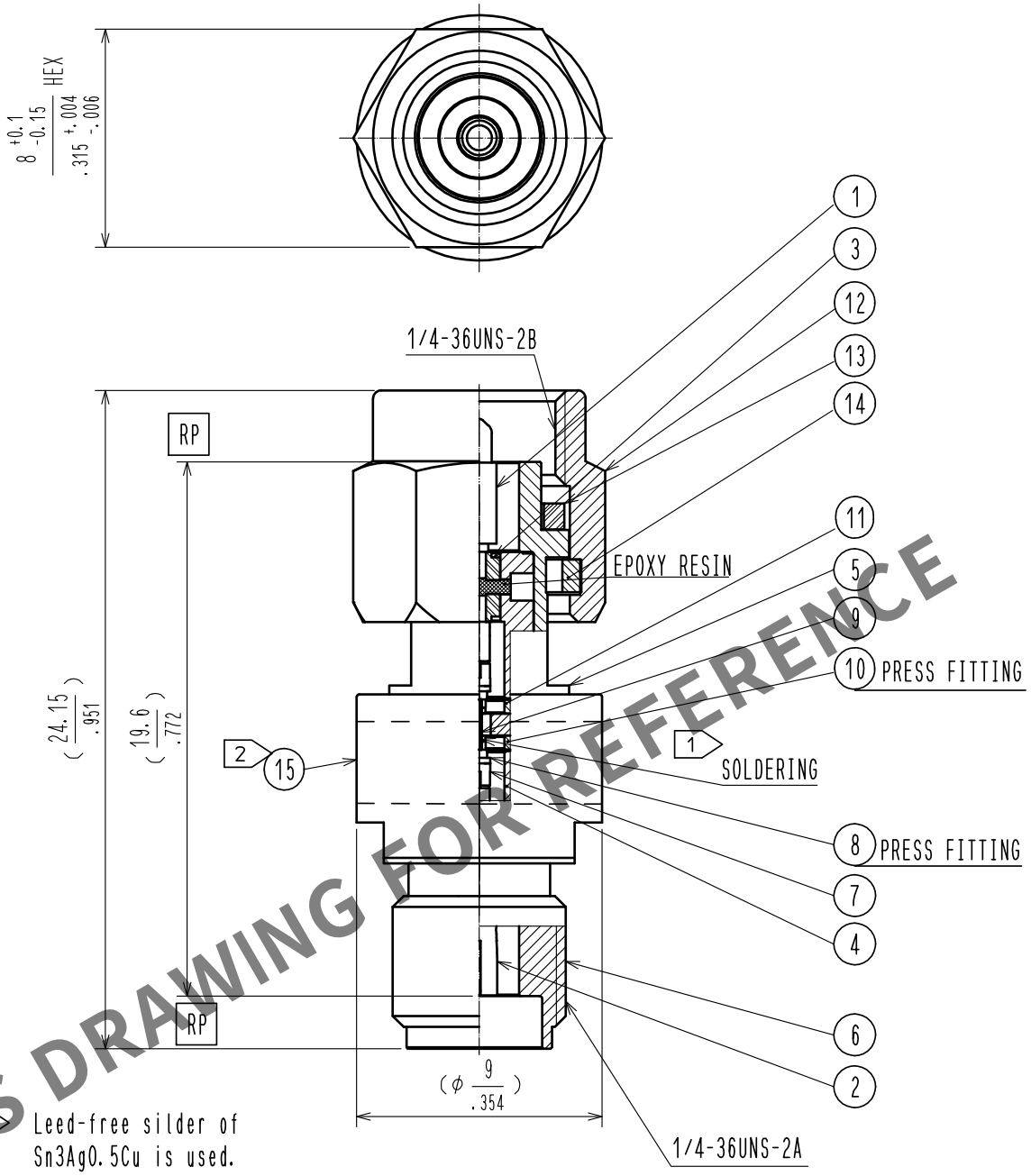

HRS DRAWING FOR REFERENCE

NOTE 1 Leed-free silder of Sn3Ag0.5Cu is used.

2 Marking of label.
1. Part No. HK-AT(9)-PJ
2. Production No.
3. Manufacturer abbreviation.

RoHS COMPLIANT

NO.	MATERIAL	FINISH . REMARKS	NO.	MATERIAL	FINISH . REMARKS
8	BRASS	GOLD PLATING			
7	BERYLLIUM COPPER	GOLD PLATING	15		LABEL
6	STAINLESS STEEL	PASSIVATE	14	BERYLLIUM COPPER	NICKEL PLATING
5	STAINLESS STEEL	PASSIVATE	13	SILICON RUBBER	
4	STAINLESS STEEL	GOLD PLATING	12	STAINLESS STEEL	PASSIVATE
3	PTFE		11	ALUMINIUM	
2	BERYLLIUM COPPER	GOLD PLATING	10	BRASS	GOLD PLATING
1	BRASS	GOLD PLATING	9	ALUMINA	

UNITS	SCALE	COUNT	DESCRIPTION OF REVISIONS	DESIGNED	CHECKED	DATE
mm	4 : 1	0				

HIROSE ELECTRIC CO., LTD.

APPROVED	: TS. NOBE	18. 07. 11	DRAWING NO.	EDC-384115-00-00
CHECKED	: MH. OGUSU	18. 07. 11	PART NO.	HK-AT(9)-PJ
DESIGNED	: HA. NISHIMURA	18. 07. 11	CODE NO.	CL354-0322-0-00
DRAWN	: HA. NISHIMURA	18. 07. 11		0 1/1

FORM HC0011-5-51