May.1.2024 Copyright 2024 HIROSE ELECTRIC CO., LTD. All Rights Reserved.
In case of consideration for using Automotive equipment / device which demand high reliability, kindly contact our sales window

| | △數 COUNT | 訂正事項 DESCRIPTION OF REVISIONS | 擔當 B Y | 檢圖 CHKD | 年月日 DATE | | △數 COUNT | 訂正事項 DESCRIPTION OF REVISIONS | 擔當 B Y | 檢圖 CHKD | 年月日 DATE |
|---|---|---|---|---|---|---|---|---|---|---|---|
| 1 | 1 | RE-6-1150 | K.I.Y | L.S.M | 18. 07. 04 | △ | | | | | . . |
| 2 | 1 | RE-6-1579 | K.I.Y | L.S.M | 20. 01. 23 | △ | | | | | . . |
| △ | | | | | . . | △ | | | | | . . |

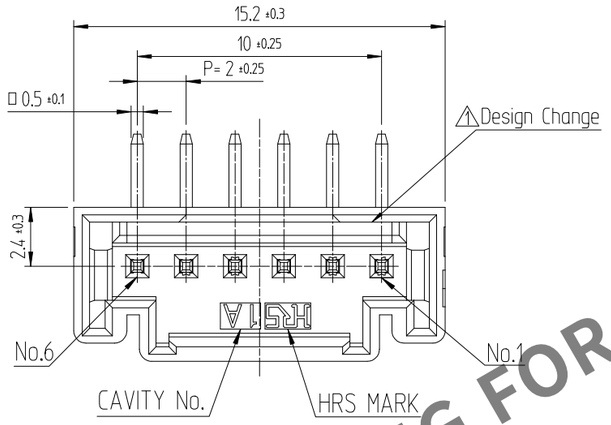


RECOMMENDED LAND PATTERN (FREE)
(PCB THICKNESS t=1.6mm)

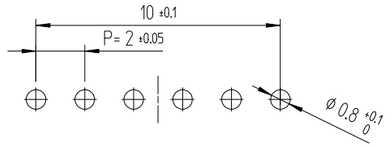


HRS DRAWING FOR REFERENCE

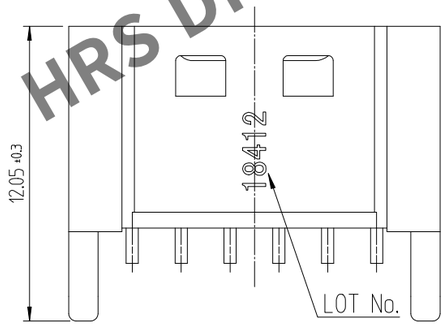


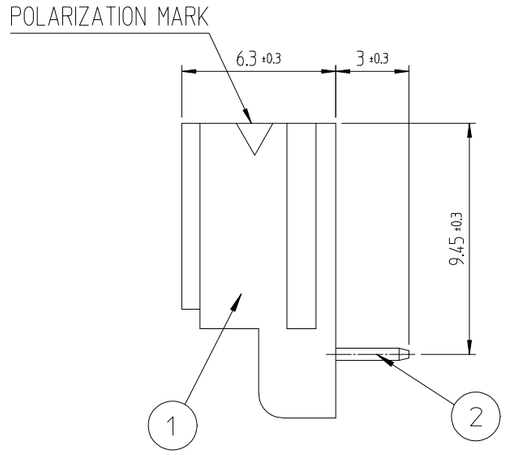


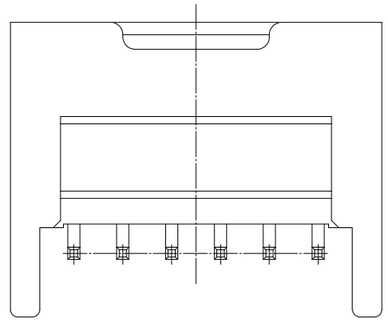

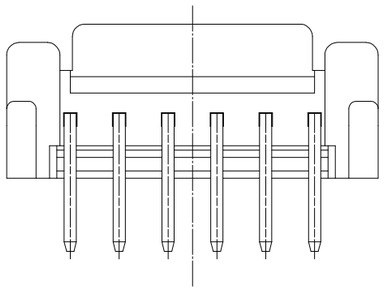

ENGAGEMENT FIGURE (2:1)

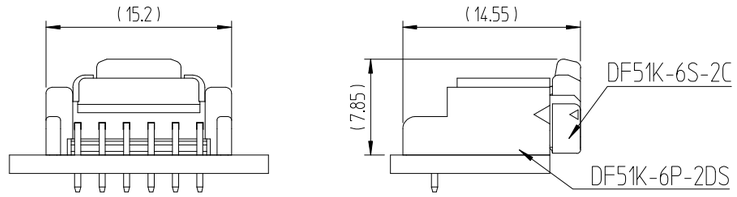


NOTE 1. 1PACK CONTAINS 200PCS.
2. ( )DIMENSIONS ARE ONLY REFERENCE.
△1 3. UL(File No. E132750) AUTHORIZATION ARTICLE.
C-UL(File No. E132750) AUTHORIZATION ARTICLE.

| NO. | MATERIAL | FINISH,REMARKS |
|---|---|---|
| 1 | PBT | UL94V-0, BLACK |
| 2 | BRASS | TIN PLATING 1μm MIN, OVER NICKEL 0.5μm MIN |

| CODE NO. (OLD) | DRAWN | DESIGNED | CHECKED | APPROVED | RELEASED |
|---|---|---|---|---|---|
| | CHOI 18.03.02 J.S | CHOI 18.03.02 J.S | LIM 18.03.02 S.M | KANG 18.03.02 T.S | ENG 20. 02. 12 DEPT |

SCALE 4:1
UNITS mm

DRAWING NO. EDC3-632475
HRS HIROSE KOREA CO.,LTD.

PART NO. DF51K-6P-2DS(800)
CODE NO. CL 6652-0059-1-800
1/1