Jun.1.2024 Copyright 2024 HIROSE ELECTRIC CO., LTD. All Rights Reserved.
In case of consideration for using Automotive equipment / device which demand high reliability, kindly contact our sales window correspondents.

| | △數 COUNT | 訂正事項 DESCRIPTION OF REVISIONS | 擔當 B Y | 檢圖 CHKD | 年月日 DATE | | △數 COUNT | 訂正事項 DESCRIPTION OF REVISIONS | 擔當 B Y | 檢圖 CHKD | 年月日 DATE |
|---|---|---|---|---|---|---|---|---|---|---|---|
| △ | | | | | . . | △ | | | | | . . |
| △ | | | | | . . | △ | | | | | . . |
| △ | | | | | . . | △ | | | | | . . |

# REFERENCE DRAWING

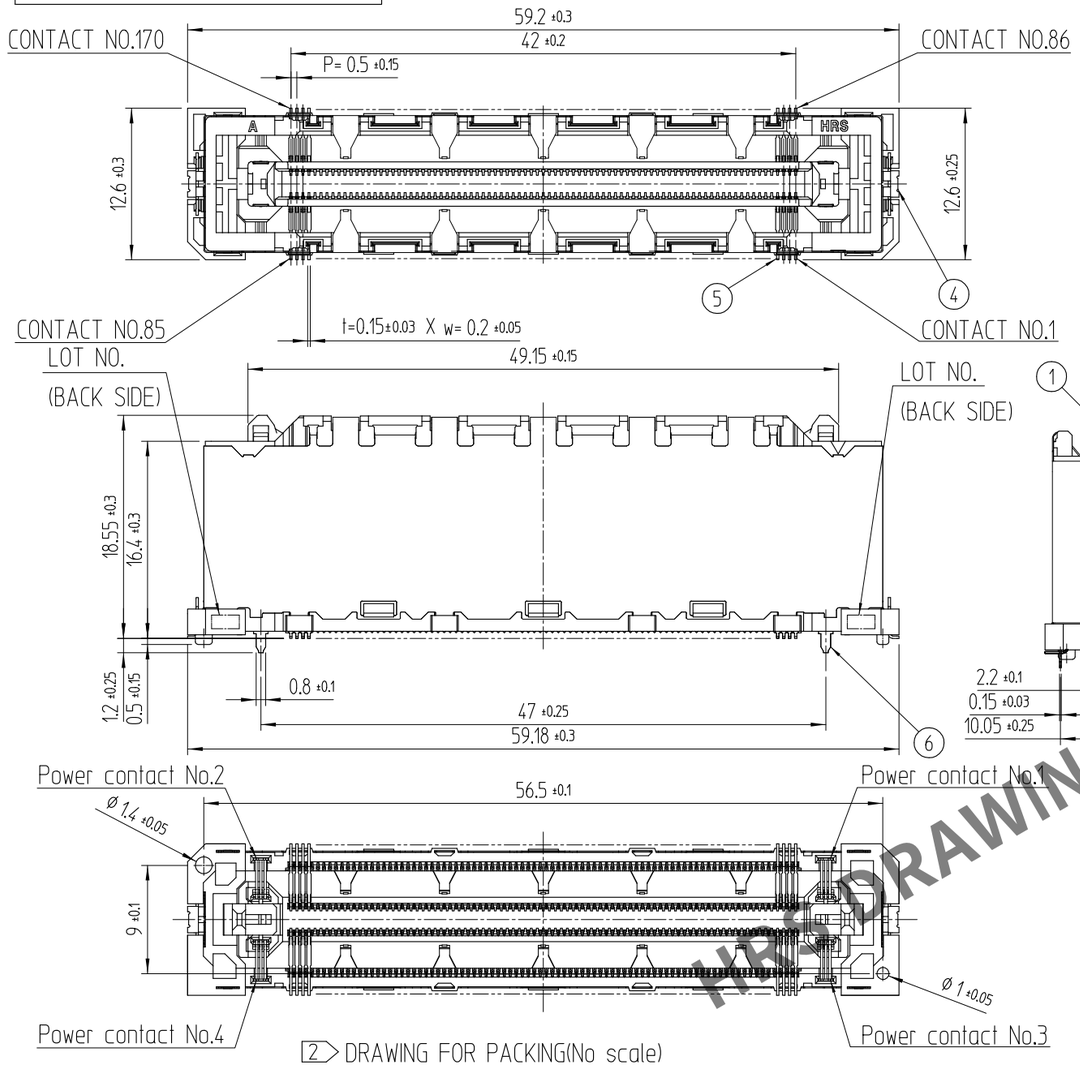


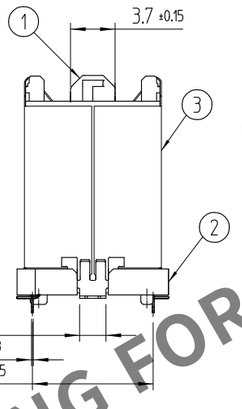


RECOMMENDED LAND PATTERN DIMENSION OF P.C.B

(P.C.B THICKNESS : t = 1.6mm)

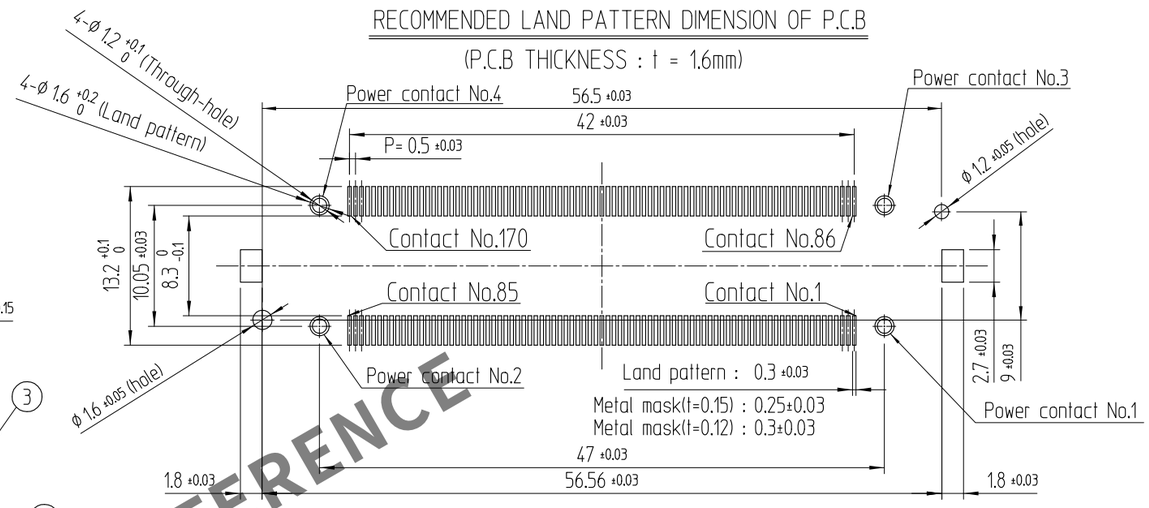


HRS DRAWING FOR REFERENCE

3> FLOATING ±0.8mm

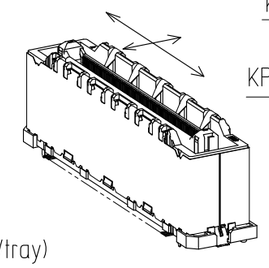

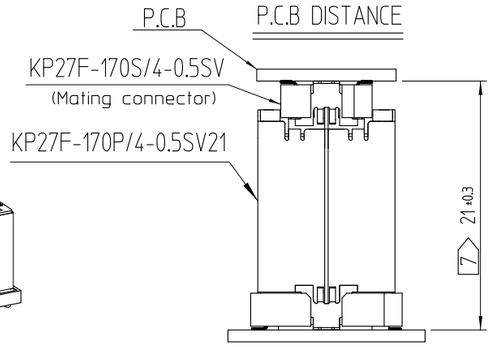


1. Lead co-planarity is 0.10mm MAX.
2> This is packaged in tray. (30pcs/tray)
3> Floating range of this connector is ±0.8mm MAX.
4> It shows the vacuum pickup area. Remove the CAP before mating connectors.
5. Blemish and hit mark can be occured through out the manufacturing process which doesn't affect quality level.
6. The dimensions in parentheses are for references.
7> Please use the connectors within the specified PCB distance.

2> DRAWING FOR PACKING(No scale)

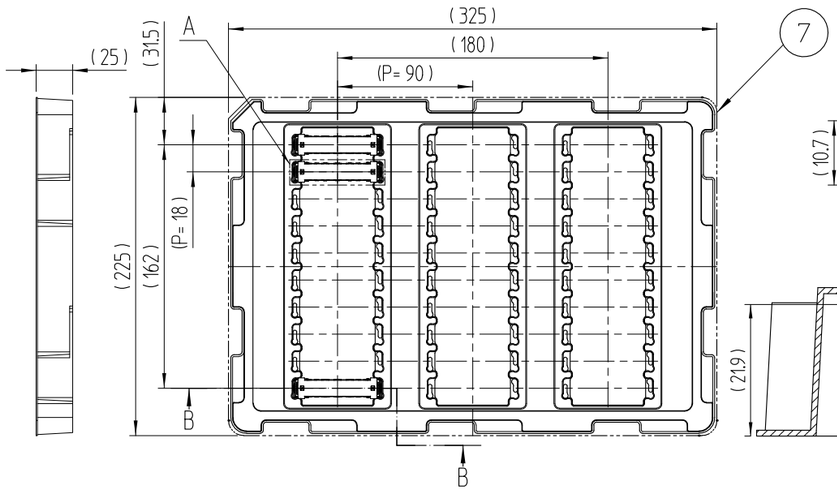


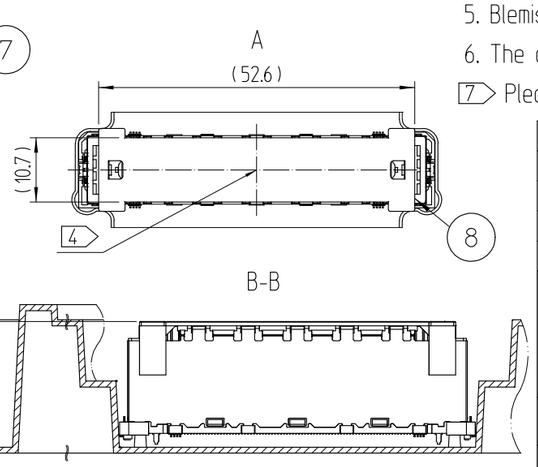


| NO. | PART | MATERIAL | FINISH,REMARKS | NO. | PART | MATERIAL | FINISH,REMARKS |
|---|---|---|---|---|---|---|---|
| 4 | METAL HOLD DOWN | COPPER ALLOY | NiP+SnP | 8 | CAP | PA | (CAP FOR VACUUM PICKUP) |
| 3 | SHIELD | COPPER ALLOY | NiP | 7 | TRAY | POLYSTYRENE | (TRAY) |
| 2 | CASE(B) | LCP | BLACK / UL94-0 | 6 | MF CONTACT | COPPER ALLOY | NiP+AuP(SMT, CONTACT AREA) |
| 1 | CASE(A) | LCP | BLACK / UL94-0 | 5 | CONTACT | COPPER ALLOY | NiP+AuP(SMT, CONTACT AREA) |

| TITLE | DRAWN | DESIGNED | CHECKED | APPROVED | RELEASED |
|---|---|---|---|---|---|
| | J.H.PARK 19.08.23 | J.H.PARK 19.08.23 | W.S.YOON 19.08.23 | B.H.AN 19.08.23 | ENG 20.04.01 DEPT |

| | | |
|---|---|---|
| SCALE 2:1 | DRAWING NO. EDC3-632772 | PART NO. KP27F-170P/4-0.5SV21(800) |
| UNITS mm | HRS HIROSE KOREA CO.,LTD. | CODE NO 6547-0011-1-800 |
| | | 1/1 |