Apr.1.2024 Copyright 2024 HIROSE ELECTRIC CO., LTD. All Rights Reserved.
In case of consideration for using Automotive equipment / device which demand high reliability, kindly contact our sales window correspondents.

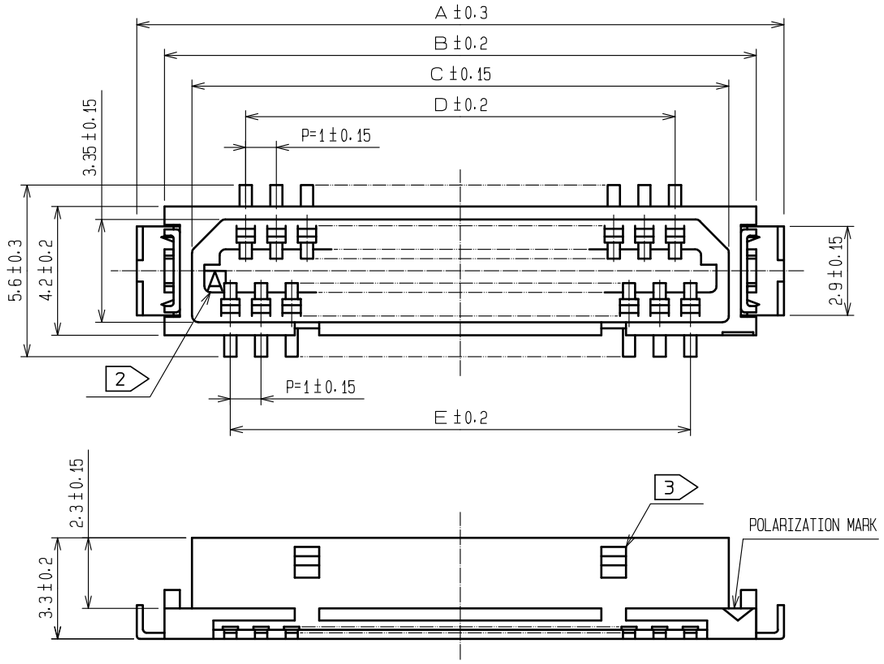

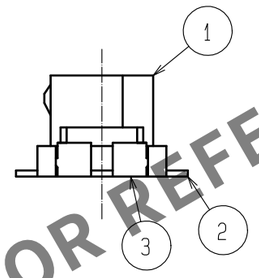

RECOMMENDED PATTERN

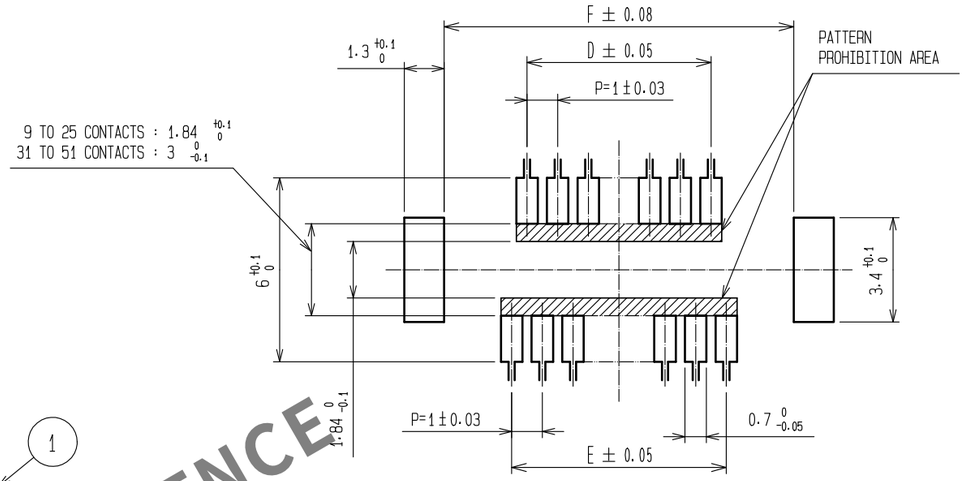

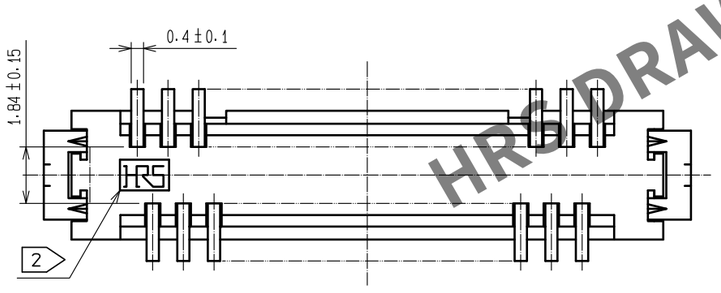

HRS DRAWING FOR REFERENCE

2	PART No.	CODE No.	NUMBER OF CONTACTS	A	B	C	D	E	F
	DF9B- 9S-1V(69)	CL540-0125-6-69	9	10.1	8.3	6.5	3	4	8.4
	DF9B-11S-1V(69)	-	11	11.1	9.3	7.5	4	5	9.4
	DF9B-13S-1V(69)	CL540-0127-1-69	13	12.1	10.3	8.5	5	6	10.4
	DF9B-15S-1V(69)	CL540-0128-4-69	15	13.1	11.3	9.5	6	7	11.4
	DF9B-17S-1V(69)	CL540-0129-7-69	17	14.1	12.3	10.5	7	8	12.4
	DF9B-19S-1V(69)	CL540-0247-3-69	19	15.1	13.3	11.5	8	9	13.4
	DF9B-21S-1V(69)	CL540-0131-9-69	21	16.1	14.3	12.5	9	10	14.4
	DF9B-23S-1V(69)	CL540-0132-1-69	23	17.1	15.3	13.5	10	11	15.4
	DF9B-25S-1V(69)	-	25	18.1	16.3	14.5	11	12	16.4
	DF9B-31S-1V(69)	CL540-0143-8-69	31	21.1	19.3	17.5	14	15	19.4
	DF9B-41S-1V(69)	CL540-0216-0-69	41	26.1	24.3	22.5	19	20	24.4
	DF9B-51S-1V(69)	CL540-0145-3-69	51	31.1	29.3	27.5	24	25	29.4

NOTES 1 : LEAD CO-PLANARITY INCLUDE REINFORCED METAL FITTINGS SHALL BE 0.1mm MAX.
2 HRS MARK AND CAV NO. ARE INDICATED IN APPROX POSITION SHOWN.
3 9 TO 25 CONTACT CONNECTORS HAVE ONE LOCK AT CENTER OF HOUSING.
31 TO 51 CONTACT CONNECTORS HAVE TWO LOCKS AS PER DRAWING.

NO.	MATERIAL	FINISH , REMARKS
3	BRASS	SURFACE:TIN PLATED(REFLOW FINISH)1μm min UNDER PLATING:COPPER 0.3μm min
2	PHOSPHOR BRONZE	CONTACT AREA:GOLD PLATED 0.2μm min LEAD AREA:TIN PLATED 1μm min UNDER PLATING:NICKEL 0.3μm min
1	POLYAMIDE	BEIGE. UL94V-0

NO.	MATERIAL	FINISH , REMARKS
8	PS	REINFORCEMENT COLLAR
7	PS	BLACK(PLASTIC REEL)
6	POLYIMIDE	BROWN(HEAT-RESISTANCE TAPE)
5	POLYESTER	CLEAR(COVER TAPE)
4	PS	CLEAR(EMBOSSED CARRIER TAPE)

UNITS	SCALE	COUNT	DESCRIPTION OF REVISIONS	DESIGNED	CHECKED	DATE
mm	5 : 1	2	DIS-H-00002725	YT. TAKAGI	TS. MIYAZAKI	17.09.28

HRS HIROSE ELECTRIC CO., LTD.

APPROVED	KH. IKEDA	12.01.16
CHECKED	AR. TAKAHASHI	12.01.16
DESIGNED	SH. HOSODA	12.01.16
DRAWN	KR. AJITO	12.01.16

DRAWING NO. EDC3-341297-02
PART NO. DF9B-*S-1V(69)
CODE NO. CL540-
2 1/2

FORM HC0011-5-7

Apr.1.2024 Copyright 2024 HIROSE ELECTRIC CO., LTD. All Rights Reserved.
In case of consideration for using Automotive equipment / device which demand high reliability, kindly contact our sales window correspondents.

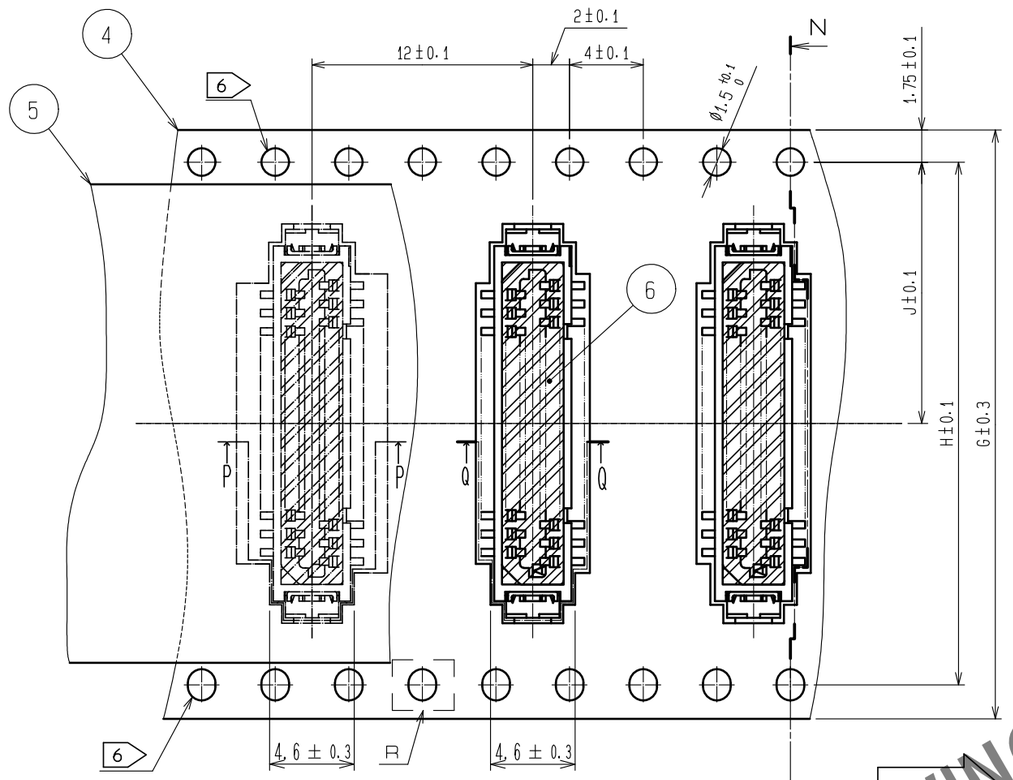

N-N(3:1)

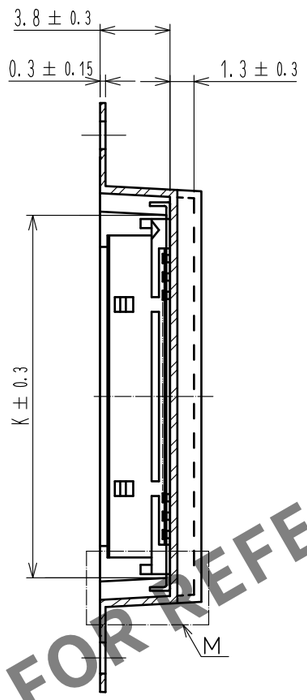

DIRECTION OF UNREELING

P-P(3:1)　　Q-Q(3:1)

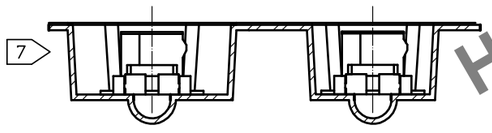

M(10:1)

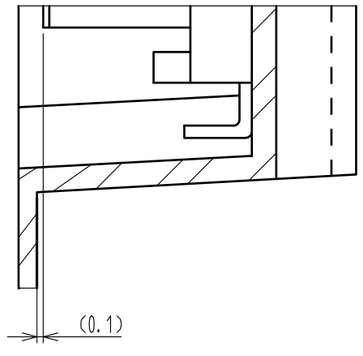

R(10:1)

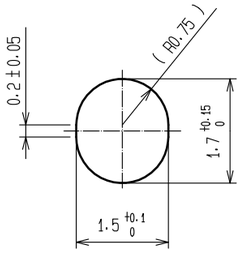

DETAIL OF PART NO. LABEL

- SUPPLIER
- QUANTITY
- PART NO.
- CODE NO.
- DATE OF MANUFACTURED

生産月日	年　月　日
図番	CL540-****-**-69
品名	DF9B-*S-1V(69)
納入数量	1000Ko
納入者	ヒロセ電機(株)

S-S(FREE)

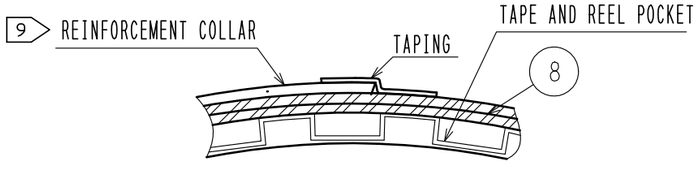

STYLE AND DIMENSION OF REEL (FREE)

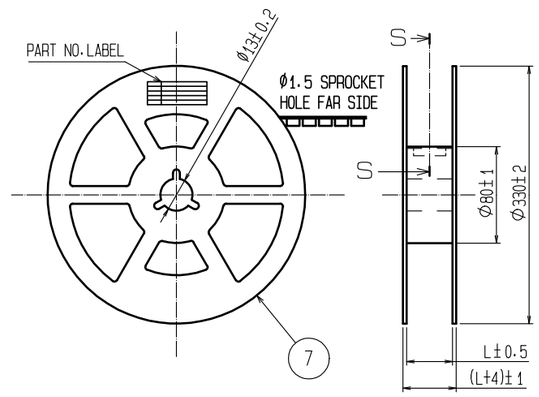

2 PART No.	CODE No.	NUMBER OF CONTACTS	G	H	J	K	L
DF9B- 9S-1V(69)	CL540-0125-6-69	9	24	—	11.5	8.7	25.5
DF9B-11S-1V(69)	-	11	24	—	11.5	9.7	25.5
DF9B-13S-1V(69)	CL540-0127-1-69	13	24	—	11.5	10.7	25.5
DF9B-15S-1V(69)	CL540-0128-4-69	15	24	—	11.5	11.7	25.5
DF9B-17S-1V(69)	CL540-0129-7-69	17	24	—	11.5	12.7	25.5
DF9B-19S-1V(69)	CL540-0247-3-69	19	24	—	11.5	13.7	25.5
DF9B-21S-1V(69)	CL540-0131-9-69	21	24	—	11.5	14.7	25.5
DF9B-23S-1V(69)	CL540-0132-1-69	23	32	28.4	14.2	15.7	33.5
DF9B-25S-1V(69)	-	25	32	28.4	14.2	16.7	33.5
DF9B-31S-1V(69)	CL540-0143-8-69	31	32	28.4	14.2	19.7	33.5
DF9B-41S-1V(69)	CL540-0216-0-69	41	44	40.4	20.2	24.7	45.5
DF9B-51S-1V(69)	CL540-0145-3-69	51	44	40.4	20.2	29.7	45.5

NOTES 4 : 1 REEL 1000 CONNECTORS.
5 : AT THE BEIGINNING OF THE REEL,
30 COMPONENTS SHALL BE EMPTY.
AT THE END OF THE REEL,
20 COMPONENTS SHALL BE EMPTY.
6 LET THE SENDING HOLE OF 9 TO 21 CONTACTS
BE ONLY THE UPPER ONE SIDE TOWARD A DRAWING.
THE SENDING HOLE OF 23 OR MORE CONTACTS
IS ESTABLISHED IN BOTH SIDES, AS SHOWN IN A FIGURE.
7 A POCKET SHAPE IS DIFFERET AT INTERVALS OF EACH
CAVITY NUMBER TO AVOID OVERLAP.
8 : PEEL FORCE REFERS TO JIS C 0806.
9 AFTER PACKING, ROLL 2 METERS OF THE REINFORCEMENT
COLLAR TO OUTER CIRCUMFERENCE OF TAPE AND REEL
POCKET, AND TAPE DOWN AT THE END THE COLLAR.

HRS DRAWING FOR REFERENCE

HRS

DRAWING NO.	EDC3-341297-02
PART NO.	DF9B-*S-1V(69)
CODE NO.	CL540-

2 2/2