Apr.1.2024 Copyright 2024 HIROSE ELECTRIC CO., LTD. All Rights Reserved.
In case of consideration for using Automotive equipment / device which demand high reliability, kindly contact our sales window correspondents.

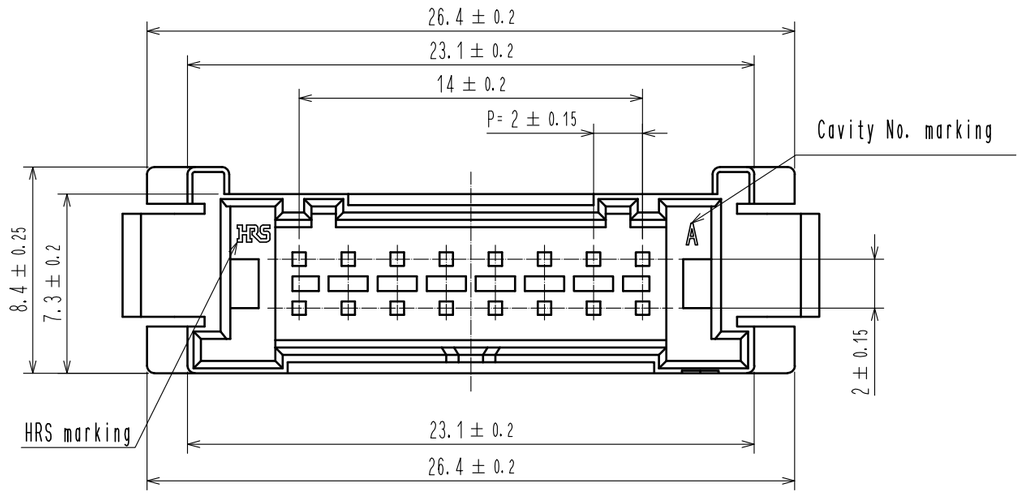

1 Recommended panel cutout dimension
3

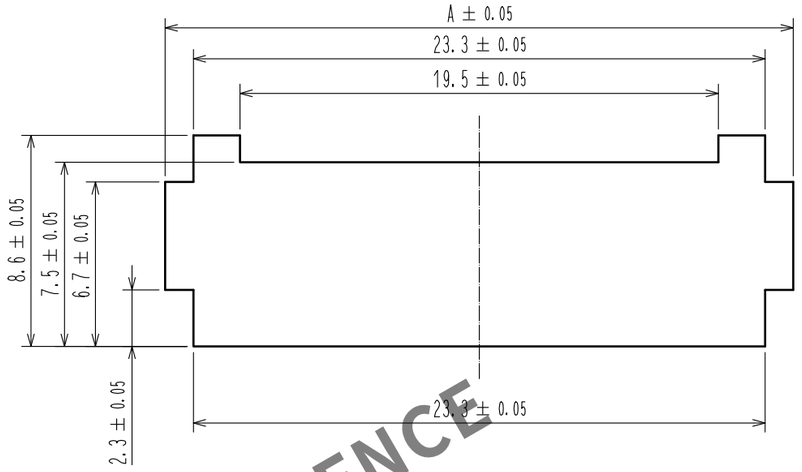

2

Panel thickness	A
0.5~0.8	25.6
0.9~1.3	26.1
1.4~1.8	26.5
1.9~2.3	26.9

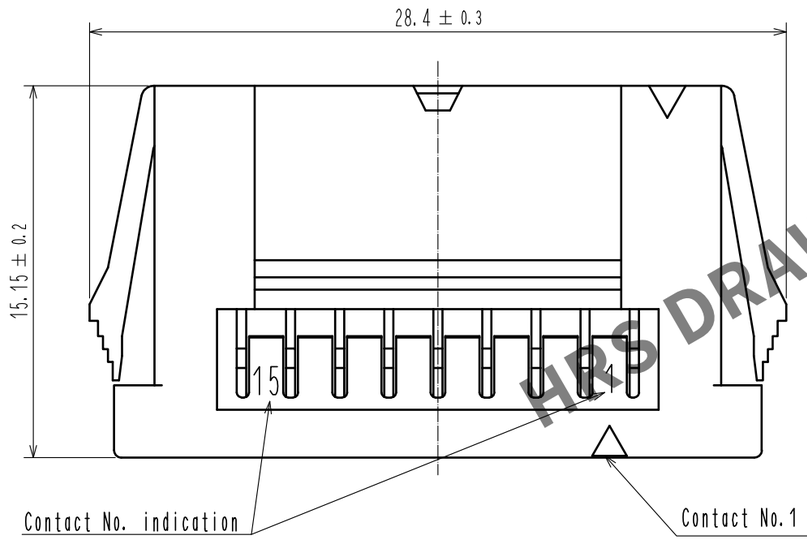

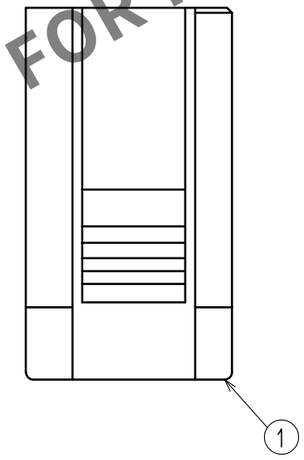

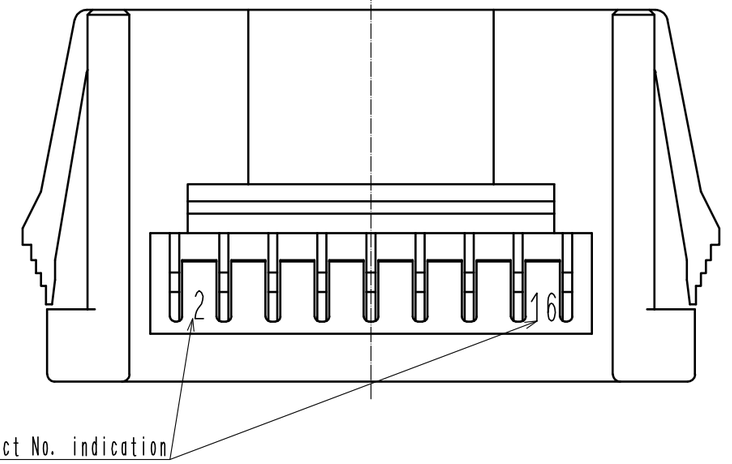

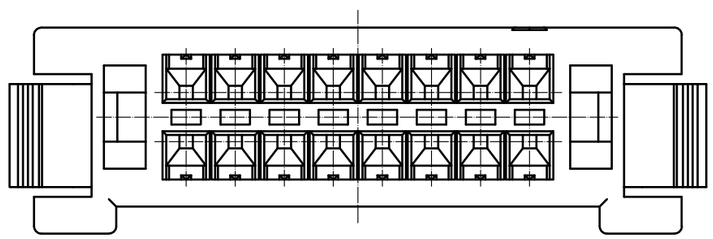

Note 1 Please use non-radius side for the panel hooking area.
2 Applicable panel thicknessing is 2.3 to 0.5 mm.
3 Consult hirose for the other panel cutout designs than recommended one.
4. Per pack : 100 pieces.
△1 5. UL(File No.E52653),
C-UL(File No.E52653) authorization article.

HRS DRAWING FOR REFERENCE

NO.	MATERIAL	FINISH . REMARKS
1	PBT	UL94V-0. BLACK

UNITS	SCALE		COUNT	DESCRIPTION OF REVISIONS	DESIGNED	CHECKED	DATE
mm	4 : 1	△1	1	DIS-H-00004537	TS. MIYAKI	HS. OKAWA	20181221

HIROSE ELECTRIC CO., LTD.

APPROVED	HS. OKAWA	20160601
CHECKED	YN. TAKASHITA	20160601
DESIGNED	TT. OHSAKO	20160601
DRAWN	TT. OHSAKO	20160601

DRAWING NO.	EDC-366288-00-00
PART NO.	DF51-16DEP-2C
CODE NO.	CL543-5077-0-00 △1 1/1