Apr.1.2024 Copyright 2024 HIROSE ELECTRIC CO., LTD. All Rights Reserved.
In case of consideration for using Automotive equipment / device which demand high reliability, kindly contact our sales window correspondents.

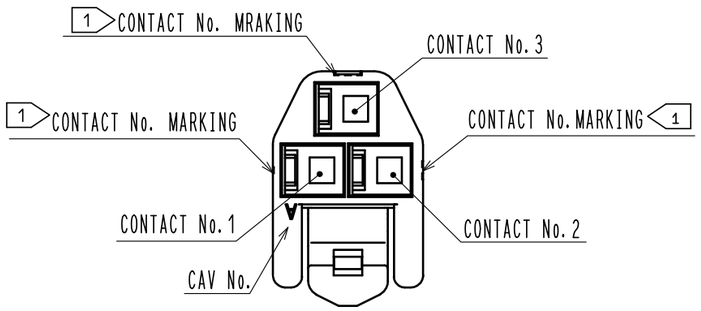

1 FIGURE-1 CONTACT No. MARKING (10:1)

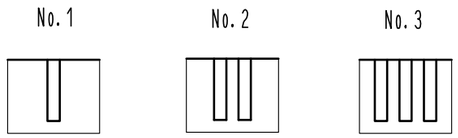

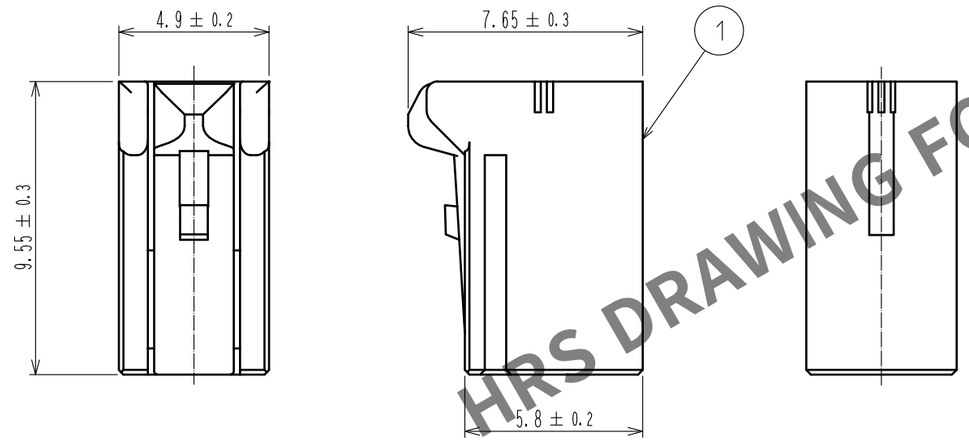

HRS DRAWING FOR REFERENCE

MATING FIGURE

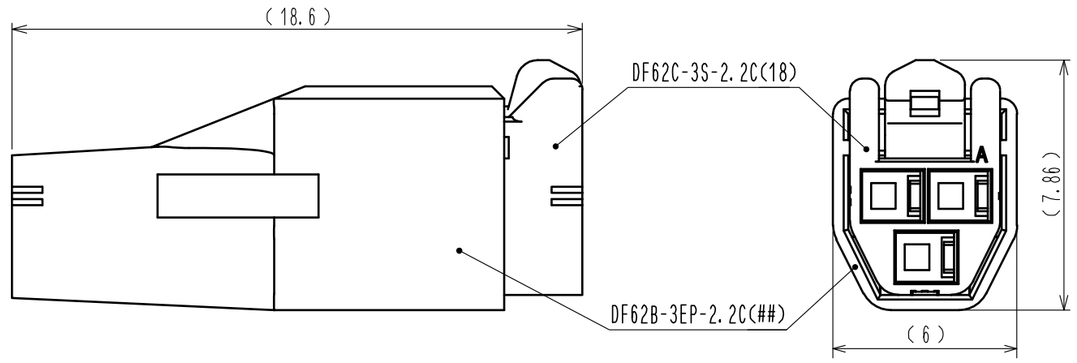

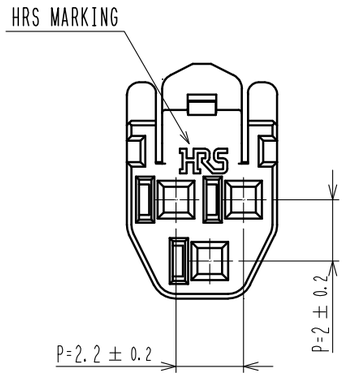

NOTE. 1 MARKINGS AT THE INDICATED POSITIONS IS CONTACT NO. MARKING. AND SHAPES ARE SHOWN IN FIGURE-1.
2. PER PACK : 100 PIECES.
3. THE DIMENSIONS IN PARENTHESIS ARE FOR REFERENCE.

NO.	MATERIAL	FINISH , REMARKS	NO.	MATERIAL	FINISH , REMARKS
			1	PBT	UL94V-0(RED)

UNITS mm	SCALE 5 : 1	COUNT	DESCRIPTION OF REVISIONS	DESIGNED	CHECKED	DATE
	0					

HRS HIROSE ELECTRIC CO., LTD.

APPROVED	KI. AKIYAMA	13.09.17	DRAWING NO.	EDC3-351971-02
CHECED	OM. MIYAMOTO	13.09.13	PART NO.	DF62C-3S-2.2C(18)
DESIGNED	TH. YOSHIZAWA	13.09.13	CODE NO.	CL544-0566-7-18
DRAWN	MI. SAKIMURA	13.09.10		0 1/1

FORM HC0011-5-7_AN