Aug.1.2021 Copyright 2021 HIROSE ELECTRIC CO., LTD. All Rights Reserved.
In case of consideration for using Automotive equipment / device which demand high reliability, kindly contact our sales window correspondents.

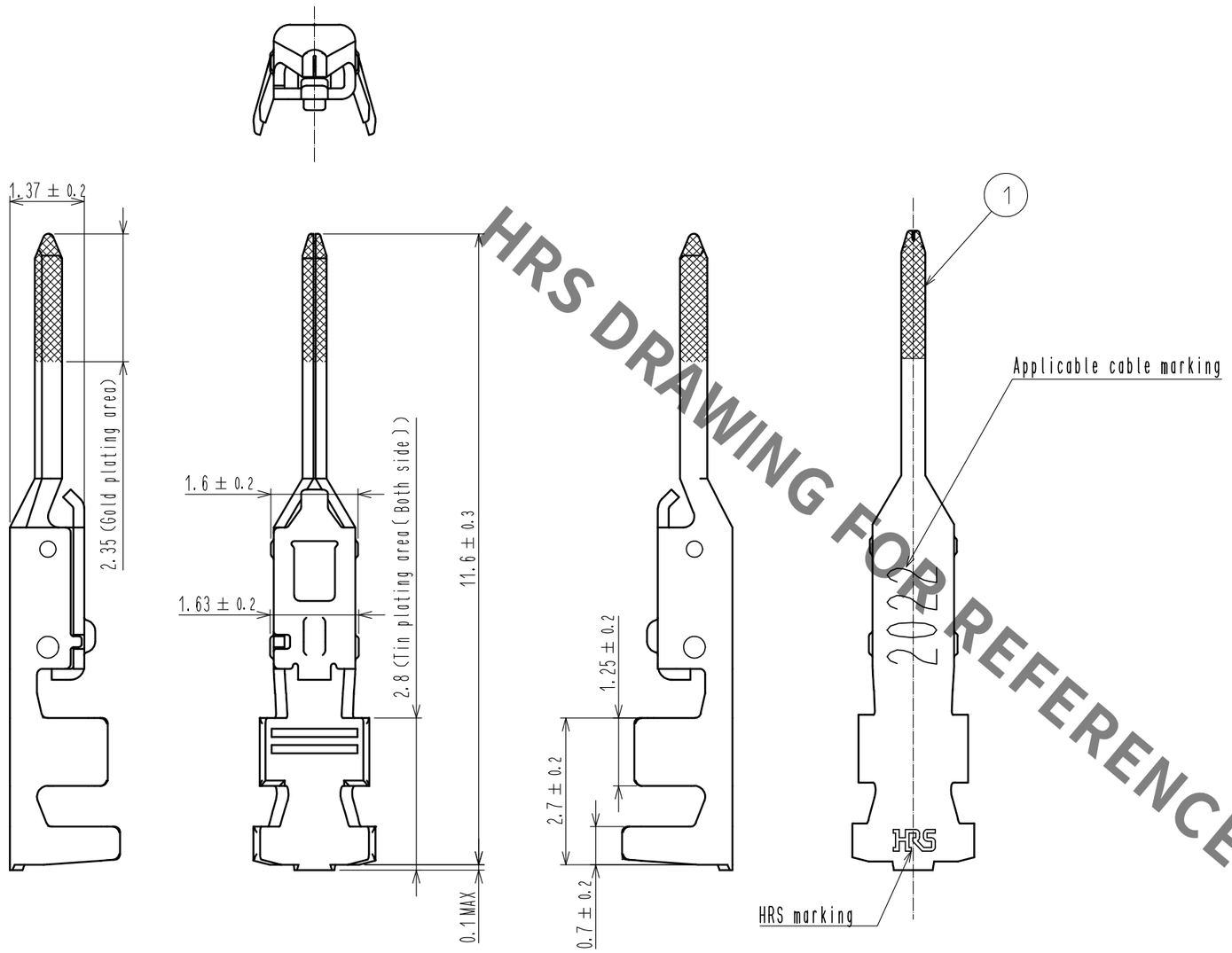


HRS DRAWING FOR REFERENCE

Note 1. Per pack : 100 pieces.

| NO. | MATERIAL | FINISH , REMARKS | NO. | MATERIAL | FINISH , REMARKS |
|---|---|---|---|---|---|
| | | | 1 | Phosphor bronze | Contact area:Gold plating 0.2μm min<br>Barrel area :Tin plating 1μm min<br>Others : Nickel plating 0.5 μm min |

| UNITS | SCALE | COUNT | DESCRIPTION OF REVISIONS | DESIGNED | CHECKED | DATE |
|---|---|---|---|---|---|---|
| mm | 10 : 1 | 0 | | | | |

HRS HIROSE ELECTRIC CO., LTD.

| | | | | |
|---|---|---|---|---|
| APPROVED | : HS. OKAWA | 17. 06. 07 | DRAWING NO. | EDC-372897-00-00 |
| CHECKED | : TS. FUKUSHIMA | 17. 06. 07 | PART NO. | DF62W-EP2022PCA |
| DESIGNED | : HT. SATO | 17. 06. 06 | CODE NO. | CL544-1043-0-00 |
| DRAWN | : MI. SAKIMURA | 17. 06. 06 | | 0 1/1 |

FORM HC0011-5-7