May.1.2024 Copyright 2024 HIROSE ELECTRIC CO., LTD. All Rights Reserved.
In case of consideration for using Automotive equipment / device which demand high reliability, kindly contact our sales window correspondents.

	COUNT	DESCRIPTION OF REVISIONS	BY	CHKD	DATE		COUNT	DESCRIPTION OF REVISIONS	BY	CHKD	DATE
△					. .	△					. .
△					. .	△					. .
△					. .	△					. .

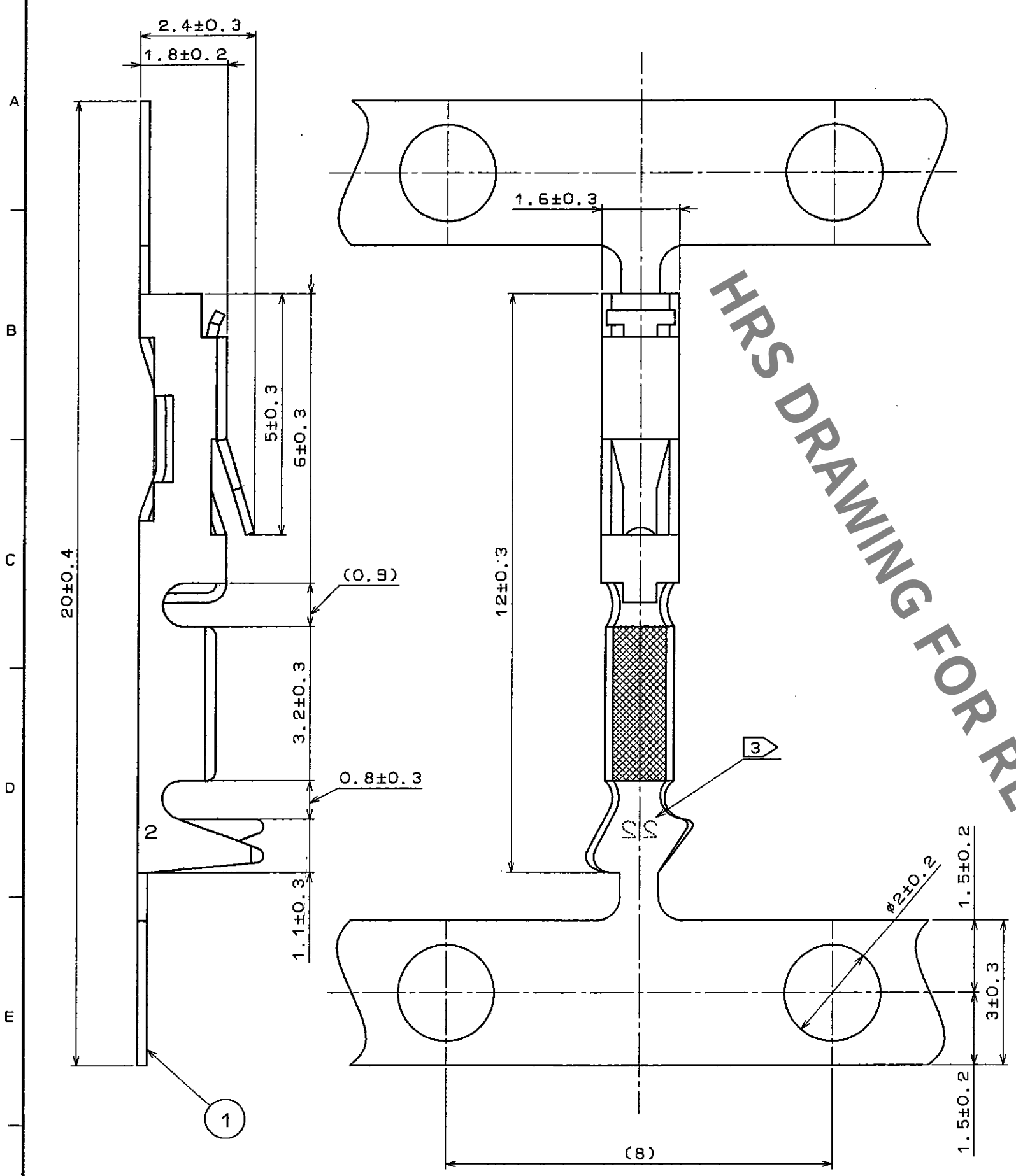

HRS DRAWING FOR REFERENCE

NOTE 1 0.2 MICRO METER MIN. GOLD IN CONTACT AREA OVER NICKEL.

2 THE DIMENSION IN A PARENTHESES ARE FOR REFERENCE.

3 DIGIT NO. "22" IDENTIFICATION.

NO.	MATERIAL	FINISH , REMARKS	NO.	MATERIAL	FINISH , REMARKS
1	PHOSPHOR BRONZE	1			

CODE NO. (OLD)	DRAWN	DESIGNED	CHECKED	APPROVED	RELEASED
	H. Sakamoto 95.2.21	H. Sakamoto 95.2.21	M. Matsuura 95.2.21	Y. Yoshimura 95.2.22	

SCALE 10 : 1
UNITS mm

DRAWING NO. EDC3-016843

PART NO. HIF3-2226SCFA

HRS HIROSE ELECTRIC CO., LTD.

CODE NO. CL562-0245-5

1/1

FORM No. 229

TO
PCK