May.1.2024 Copyright 2024 HIROSE ELECTRIC CO., LTD. All Rights Reserved.
In case of consideration for using Automotive equipment / device which demand high reliability, kindly contact our sales window correspondents.

	COUNT	DESCRIPTION OF REVISIONS	BY	CHKD	DATE		COUNT	DESCRIPTION OF REVISIONS	BY	CHKD	DATE
△					. .	△					. .
△					. .	△					. .
△					. .	△					. .

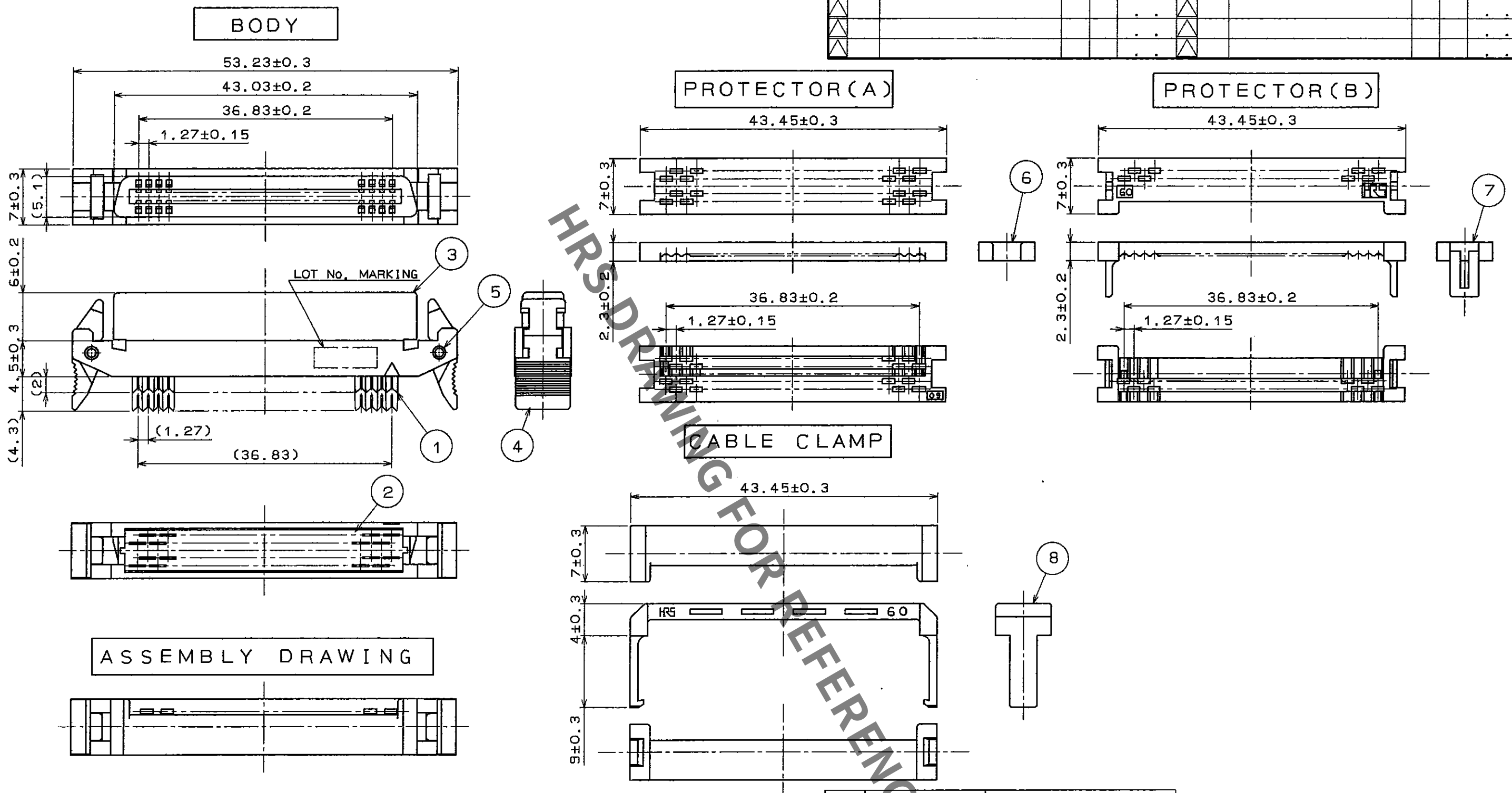

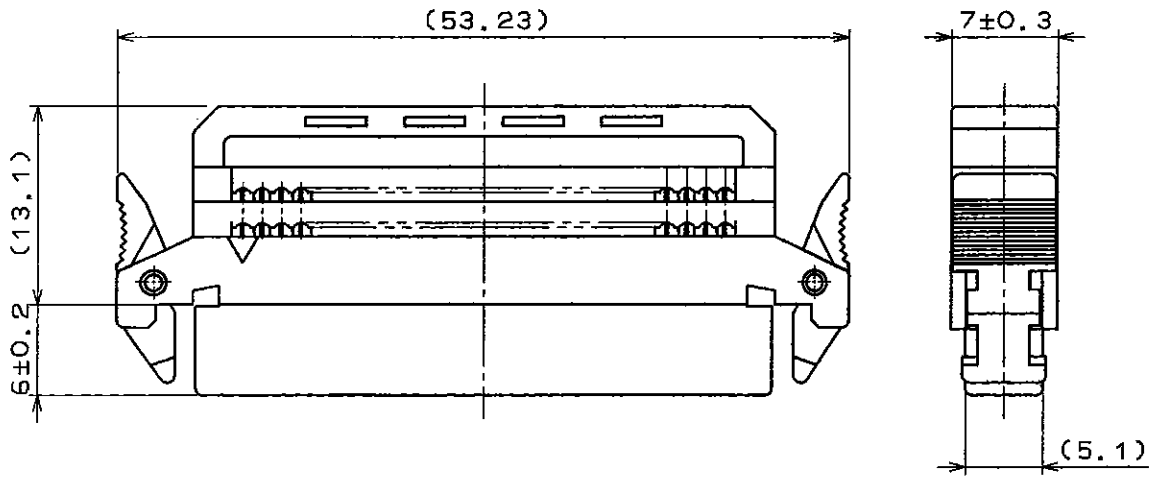

HRS DRAWING FOR REFERENCE

NO.	MATERIAL	FINISH , REMARKS	NO.	MATERIAL	FINISH , REMARKS
4	PBT	BLACK UL94V-0			
3	PBT	BLACK UL94V-0	8	POLYAMIDE	BLACK UL94V-0
2	PBT	BLACK UL94V-0	7	PBT	BLACK UL94V-0
1	PHOSPPHOR BRONZE	CONTACT AREA:GOLD(FLASH) UNDER PLATED:NICKEL INSULATION DISPLACEMENT AREA :NICKEL	6	PBT	BLACK UL94V-0
			5	SUS	

CODE NO.(OLD)	DRAWN	DESIGNED	CHECKED	APPROVED	RELEASED
	K.Tsunematsu 950930	K.Tsunematsu 950930	M.Yamaguchi 950930	M.Yamaguchi 950930	

SCALE FREE
UNITS mm

DRAWING NO. EDC3-150614

HRS HIROSE ELECTRIC CO., LTD.

PART NO. FX2B-60SA-1.27R

CODE NO. CL572-0625-3

1/1

FORM No.229

TO
PCM