Apr.1.2024 Copyright 2024 HIROSE ELECTRIC CO., LTD. All Rights Reserved.
In case of consideration for using Automotive equipment / device which demand high reliability, kindly contact our sales window correspondents.

	COUNT	DESCRIPTION OF REVISIONS	BY	CHKD	DATE		COUNT	DESCRIPTION OF REVISIONS	BY	CHKD	DATE
△					. .	△					. .
△					. .	△					. .
△					. .	△					. .

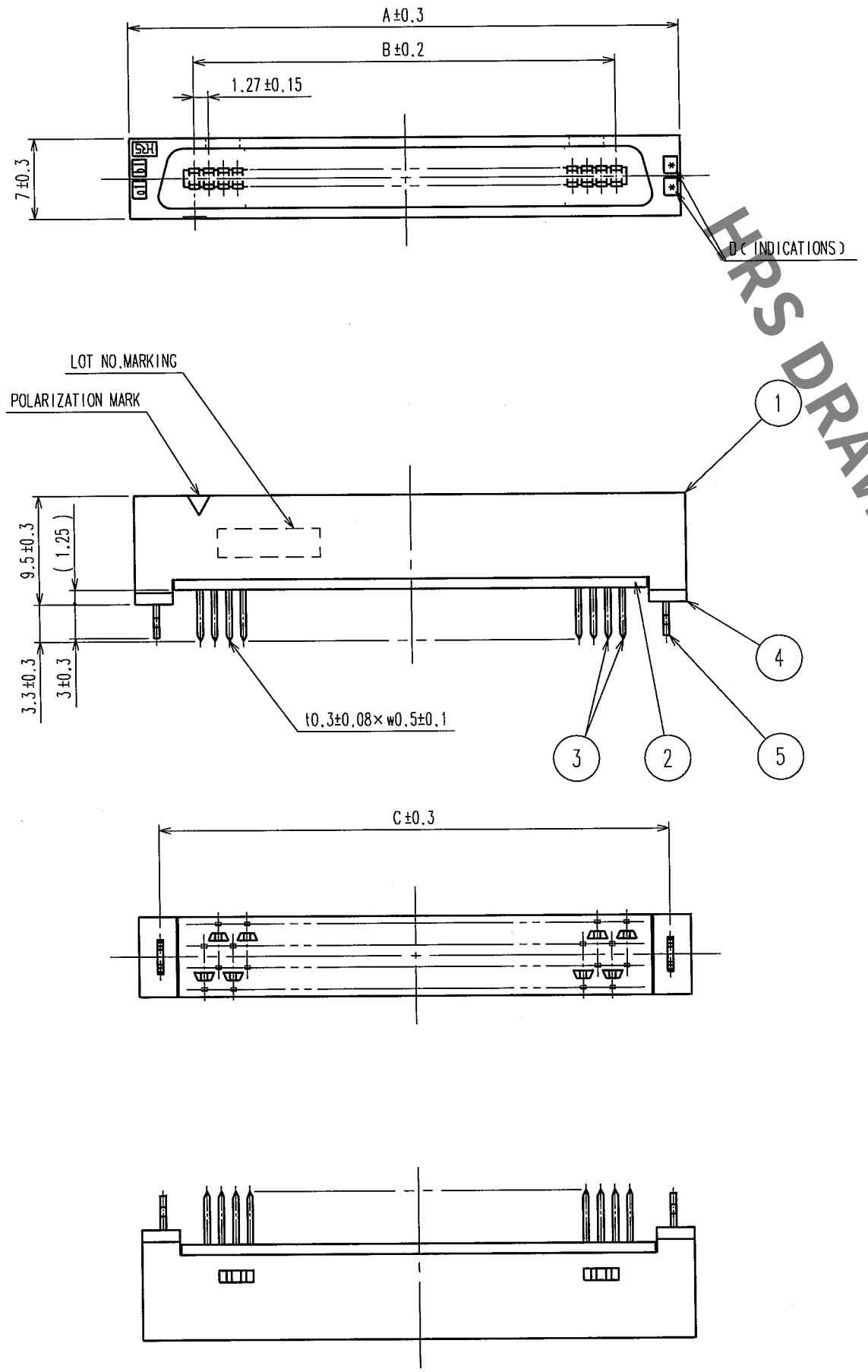

RECOMMENDEND PC BOARD HOLE PATTERN(MOUNTING SIDE)
t=1.6

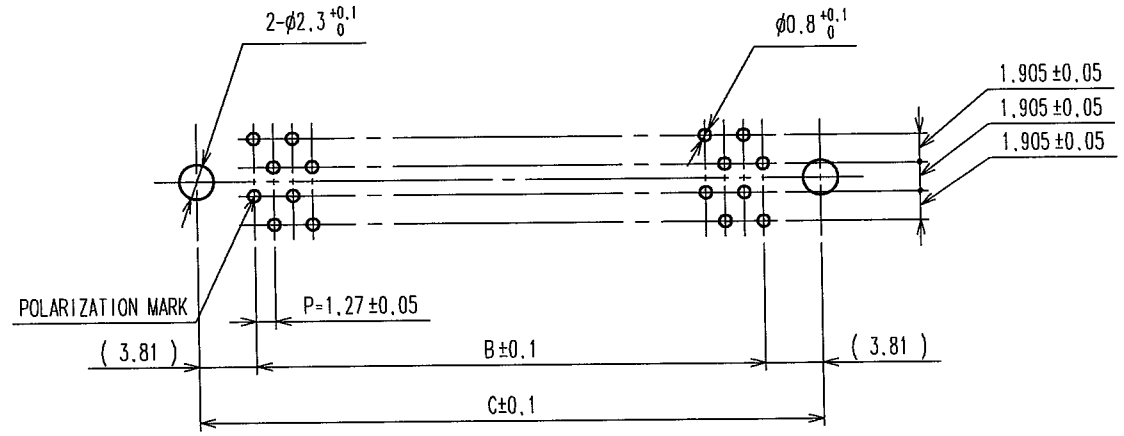

PART No.	CODE No.	2	A	B	C	D
FX2CA1-20P-1.27DSAL(71)	CL572-2361-4-71	20	22.75	11.43	19.05	10
FX2CA1-32P-1.27DSAL(71)	CL572-2362-7-71	32	30.37	19.05	26.67	16
FX2CA1-40P-1.27DSAL(71)	CL572-2363-0-71	40	35.45	24.13	31.75	20
FX2CA1-52P-1.27DSAL(71)	CL572-2364-2-71	52	43.07	31.75	39.37	26
FX2CA1-60P-1.27DSAL(71)	CL572-2365-5-71	60	48.15	36.83	44.45	30
FX2CA1-68P-1.27DSAL(71)	CL572-2366-8-71	68	53.23	41.91	49.53	34
FX2CA1-80P-1.27DSAL(71)	CL572-2367-0-71	80	60.85	49.53	57.15	40
FX2CA1-100P-1.27DSAL(71)	CL572-2368-3-71	100	73.55	62.23	69.85	50
FX2CA1-120P-1.27DSAL(71)	CL572-2369-6-71	120	86.25	74.93	82.55	60

NOTES 1. THE DIMENSIONS IN PARENTHESES ARE FOR REFERENCE.
2 NUMBER OF PIN.

HRS DRAWING FOR REFERENCE

NO.	MATERIAL	FINISH, REMARKS	NO.	MATERIAL	FINISH, REMARKS
5	PHOSPHOR BRONZE	TIN-PLATING	3	PHOSPHOR BRONZE	CONTACT AREA:GOLD 0.2μm min
4	POLYAMIDE	BLACK UL94V-0			DIP AREA:TIN-PLATING 2μm min
1,2	POLYAMIDE	BLACK UL94V-0			UNDER PLATING:NICKEL 2μm min

CODE NO.(OLD)	DRAWN	DESIGNED	CHECKED	APPROVED	RELEASED
CL	I.OKAYAMA 04.06.02	K.NAKAMURA 04.06.02	H.OKAWA 04.06.09	H.OKAWA 04.06.09	. .

SCALE FREE
UNITS mm
DRAWING NO. EDC3-083054-21
HRS HIROSE ELECTRIC CO., LTD
PART NO. FX2CA1-**P-1.27DSAL(71)
CODE NO. CL572
1/1

TO
PCK