Apr.1.2024 Copyright 2024 HIROSE ELECTRIC CO., LTD. All Rights Reserved.
In case of consideration for using Automotive equipment / device which demand high reliability, kindly contact our sales window correspondents.

	COUNT	DESCRIPTION OF REVISIONS	BY	CHKD	DATE		COUNT	DESCRIPTION OF REVISIONS	BY	CHKD	DATE
△					. .	△					. .
△					. .	△					. .
△					. .	△					. .

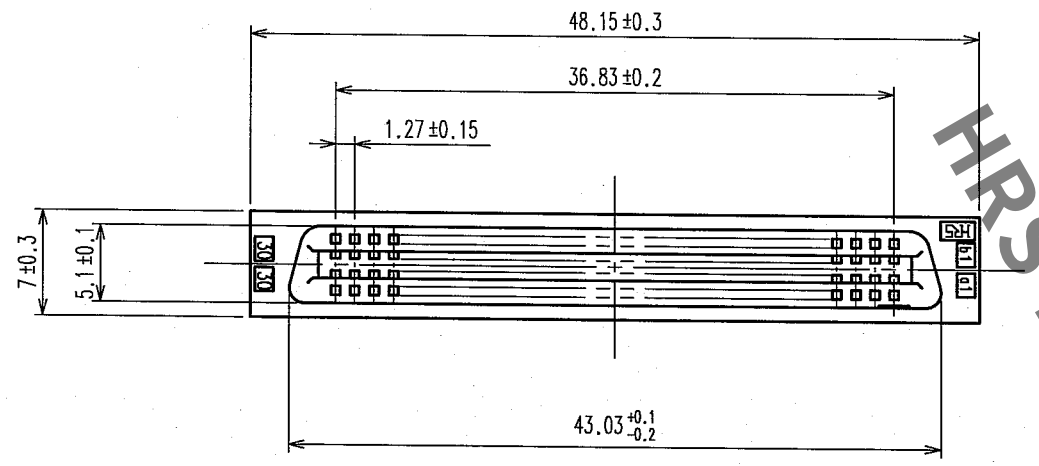

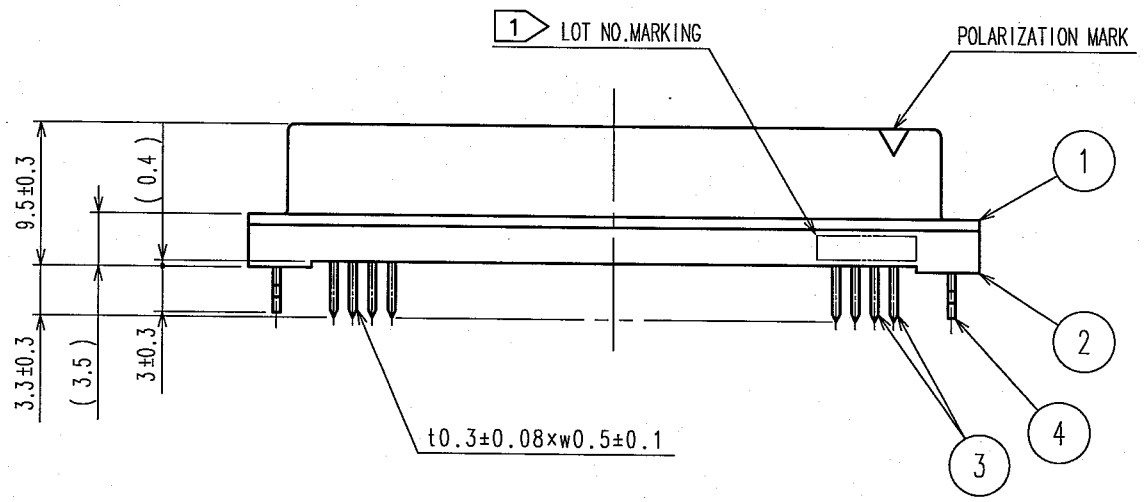

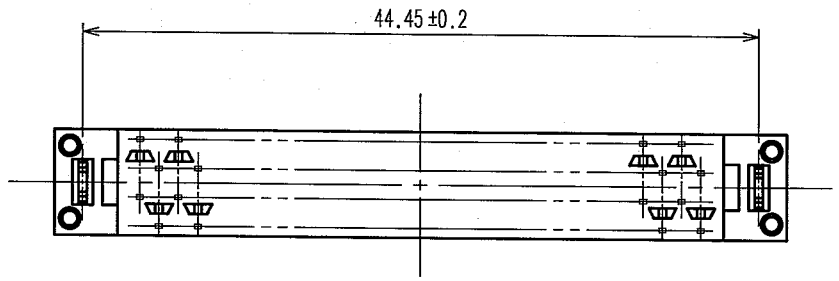

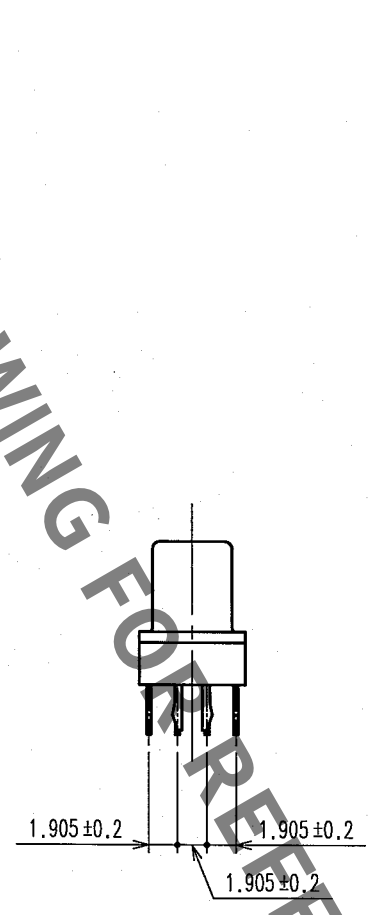

RECOMMENDED PC BOARD HOLE PATTERN
(MOUNTING SIDE) t=1.6

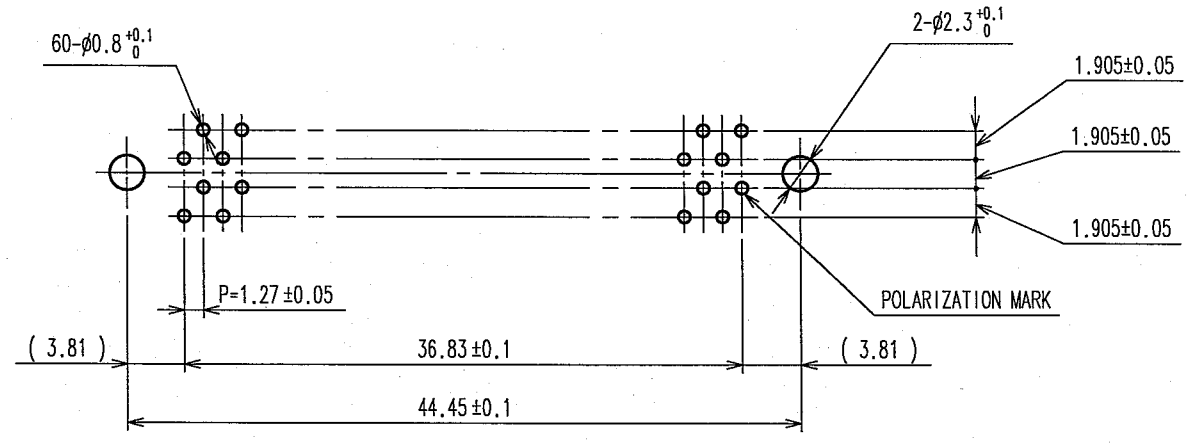

NOTES 1 LOT NO. MARKING SIDE SHALL BE OPTIONAL.
2. THE DIMENSIONS IN PARENTHESES ARE FOR REFERENCE.

HRS DRAWING FOR REFERENCE

NO.	MATERIAL	FINISH, REMARKS
4	PHOSPHOR BRONZE	TIN-PLATING
1,2	POLYAMIDE	BLACK, UL94V-0

NO.	MATERIAL	FINISH, REMARKS
3	PHOSPHOR BRONZE	CONTACT AREA : GOLD 0.2μm min. DIP AREA : TIN 2μm min. UNDER PLATING : NICKEL 2μm min.

CODE NO.(OLD)	DRAWN	DESIGNED	CHECKED	APPROVED	RELEASED
CL	K.Doi '05.09.02	K.Doi '05.09.02	K.Ogawa '05.09.02	H.Okawa 05.09.02	. .

SCALE 2 : 1	DRAWING NO. EDC3-083191-21	PART NO. FX2C-60S-1.27DSAL(71)
UNITS mm	HRS HIROSE ELECTRIC CO., LTD	CODE NO. CL572-2455-6-71 1/1

TO
PCK