	COUNT	DESCRIPTION OF REVISIONS	BY	CHKD	DATE		COUNT	DESCRIPTION OF REVISIONS	BY	CHKD	DATE
1		DIS-F-002220(A)	H.S		07.7.27						. .
2		DIS-F-005261(B)	H.S	H.Y	11.1.24						. .
					. .						. .

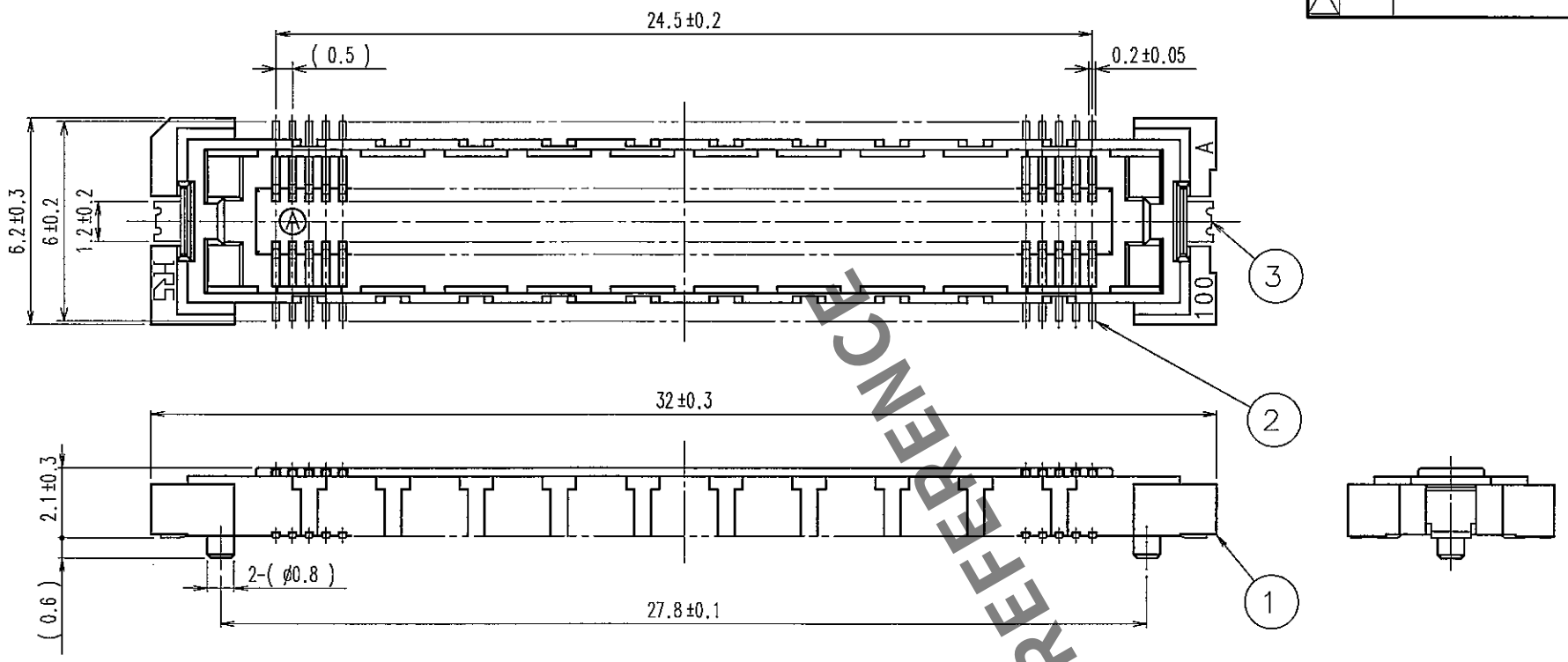

RECOMMENDED LAND PATTERN DIMENSION OF PCB

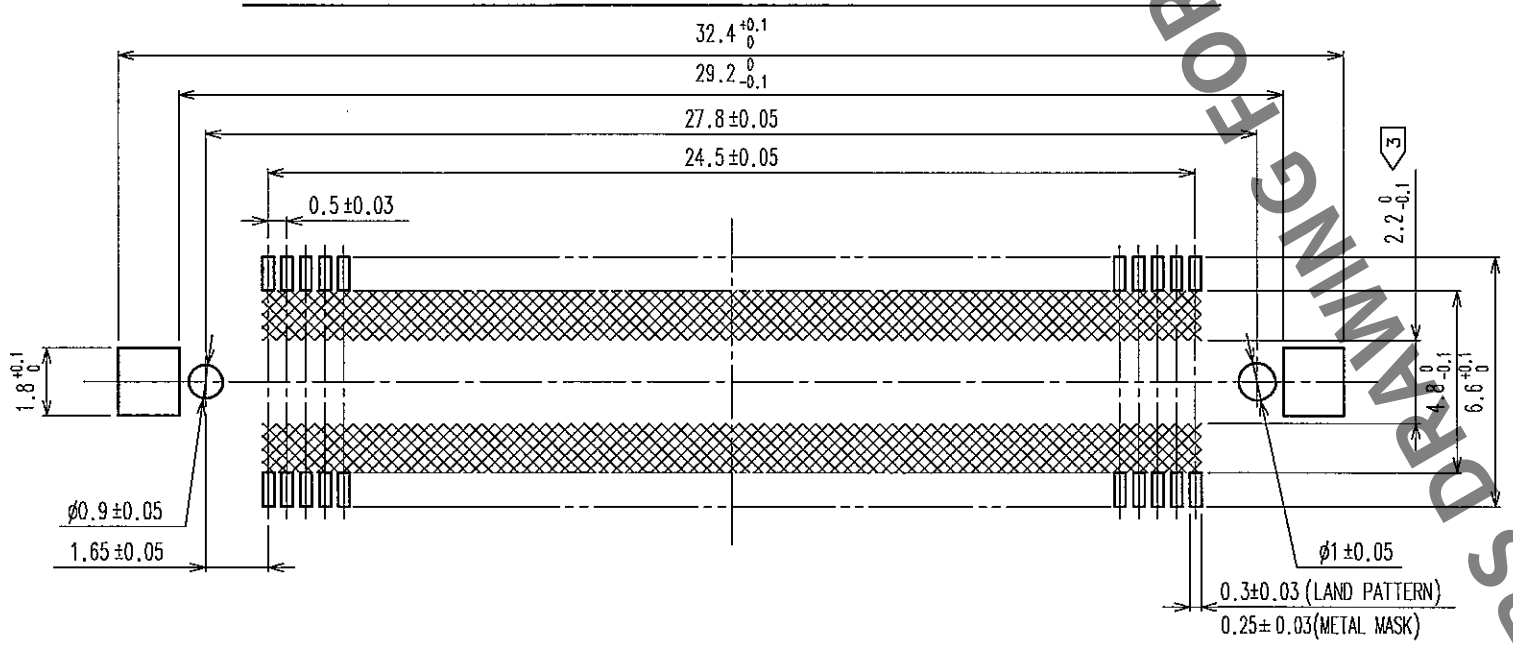

NOTES
1. SMT LEAD-COPLANARITY:0.1 MAX.
2. THIS PRODUCT HAS NO POLARITY TO PATTERN FOR MOUNTING.
3. MAKE SURE WIDTH OF PATTERN IS WITHIN THAT OF LAND ,OR LEAD MAY TOUCH PATTERN.(THIS APPLIES TO HATCHED AREA.)
4. TO BE EMBOSSED CARRIER TAPED AS SPECIFIED IN SHEET 2.

NO.	MATERIAL	FINISH, REMARKS	NO.	MATERIAL	FINISH, REMARKS
2	PHOSPHOR BRONZE	CONTACT AREA:GOLD(0.1μm) OVER NICKEL LEAD:GOLD FLASH OVER NICKEL			
1	LCP	BEIGE UL94V-0	3	PHOSPHOR BRONZE	TIN PLATED

CODE NO. (OLD)	DRAWN	DESIGNED	CHECKED	APPROVED	RELEASED
CL	J.Matsukawa 00.01.15	J.Matsukawa 00.01.15	M.Sakai 00.01.17	Y.Yoshimura 00.01.17	

SCALE 5 : 1	DRAWING NO. EDC3-152641-01	PART NO. FX11A-100S-SV(21)
UNITS mm	HRS HIROSE ELECTRIC CO.,LTD.	CODE NO. CL573-0743-6-21 1/2

TO
PCK

FOR REFERENCE
HRS DRAWING

May.1.2024 Copyright 2024 HIROSE ELECTRIC CO., LTD. All Rights Reserved.
In case of consideration for using Automotive equipment / device which demand high reliability, kindly contact our sales window correspondents.

	COUNT	DESCRIPTION OF REVISIONS	BY	CHKD	DATE		COUNT	DESCRIPTION OF REVISIONS	BY	CHKD	DATE
△					. .	△					. .
△					. .	△					. .
△					. .	△					. .

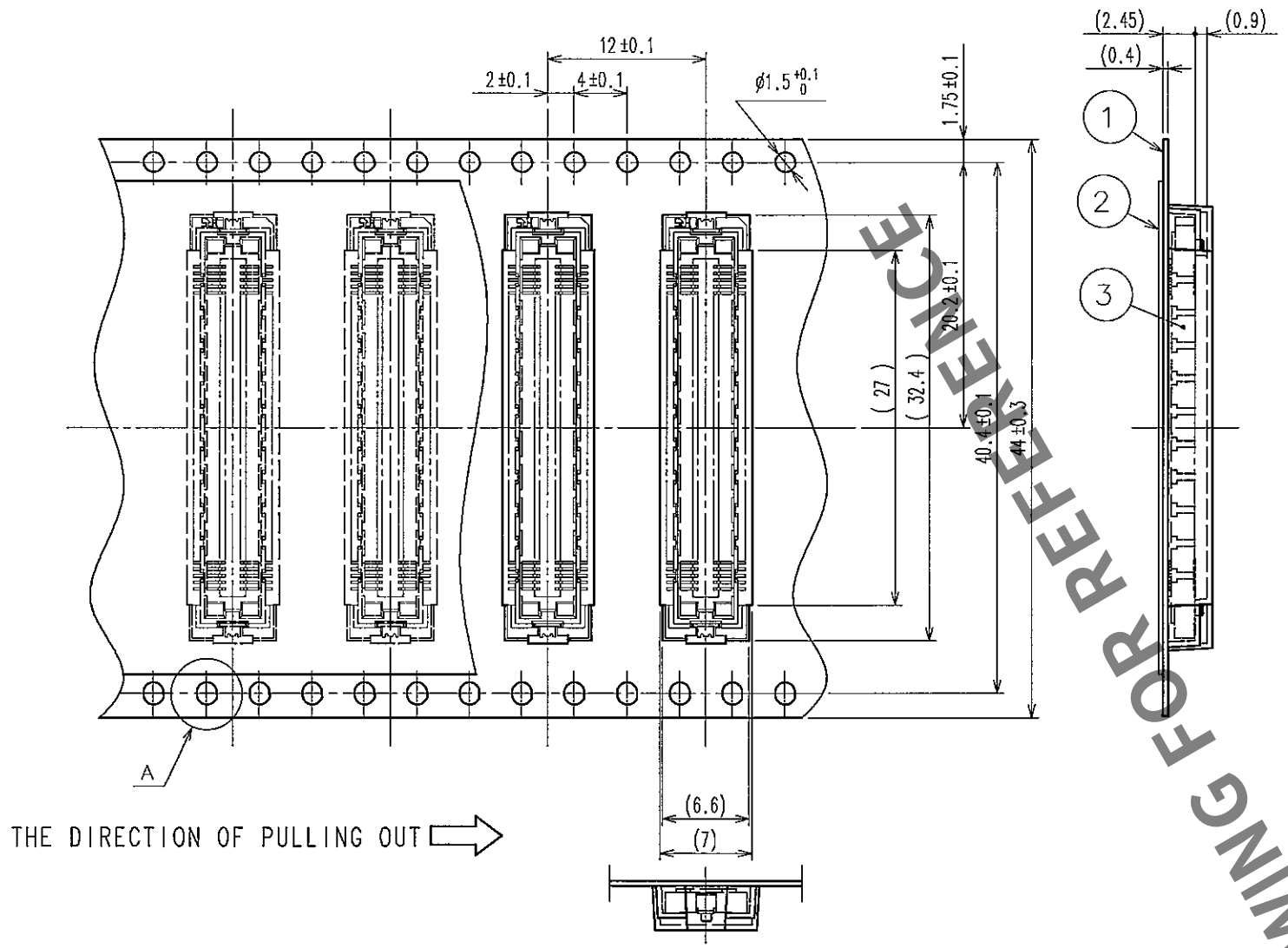

REELED DIMENSION (FREE)

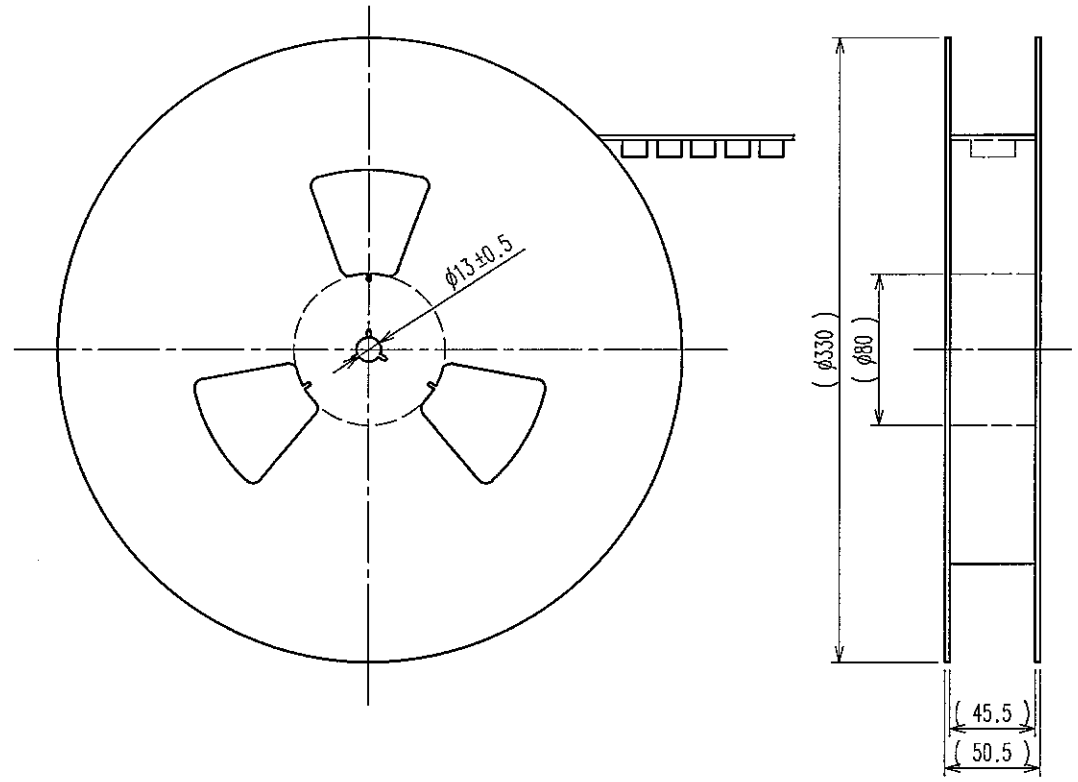

A (5 : 1)

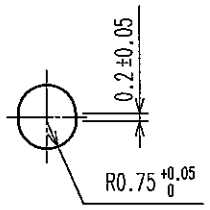

NOTES 1 1REEL:1000 CONNECTORS.
2 MINIMUM 10 COMPARTMENTS FROM BOTH REEL ENDS REMAIN EMPTY.
3 THIS PRODUCT HAS NO POLARITY TO TAPE AND REEL PACKAGING.

NO.	MATERIAL	FINISH, REMARKS	NO.	MATERIAL	FINISH, REMARKS
2	PET	TOP COVER TAPE			
1	PS	EMBOSSED CARRIER TAPE	3	(CONNECTOR)	

CODE NO.(OLD)	DRAWN	DESIGNED	CHECKED	APPROVED	RELEASED
CL	J.Matsukawa 00.01.15	J.Matsukawa 00.01.15	M.Ishida 00.01.17	J.Yoshimura 00.01.17	. .
DRAWING FOR PACKING					

SCALE 2 : 1	DRAWING NO. EDC3-152641-01	PART NO. FX11A-100S-SV(21)
UNITS mm	HRS HIROSE ELECTRIC CO., LTD	CODE NO. CL573-0743-6-21 2/

TO
PCK

HRS DRAWING FOR REFERENCE

May.1.2024 Copyright 2024 HIROSE ELECTRIC CO., LTD. All Rights Reserved.
In case of consideration for using Automotive equipment / device which demand high reliability, kindly contact our sales window correspondents.