May.1.2024 Copyright 2024 HIROSE ELECTRIC CO., LTD. All Rights Reserved.
In case of consideration for using Automotive equipment / device which demand high reliability, kindly contact our sales window correspondents.

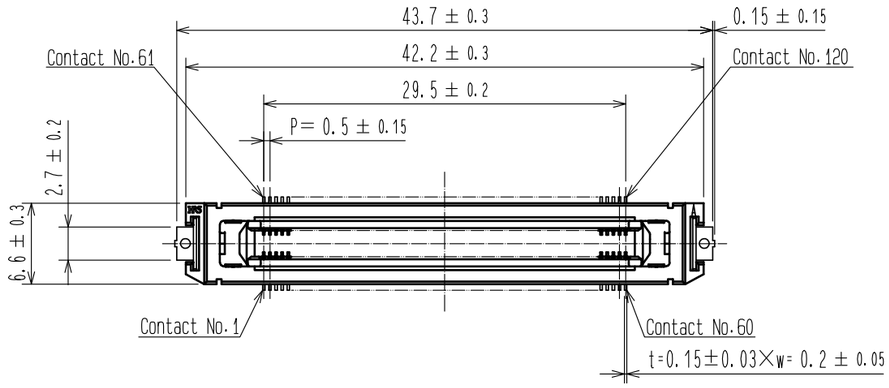

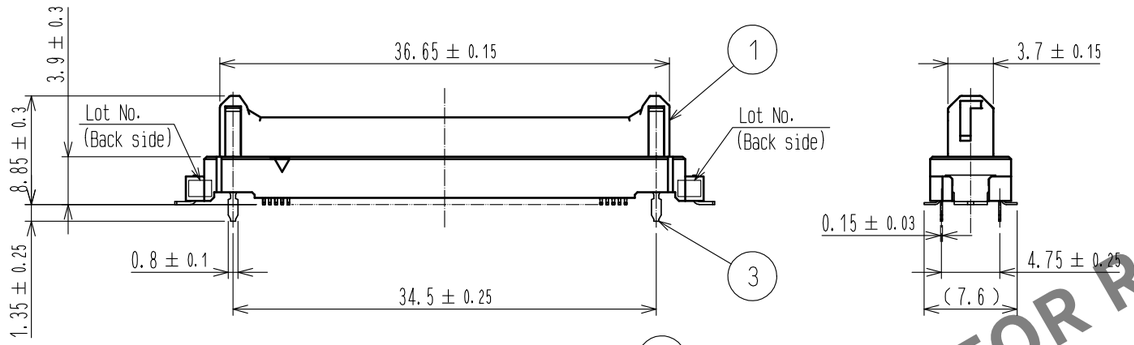

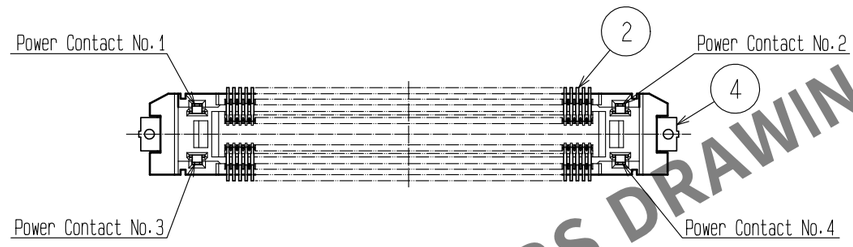

RECOMMENDED LAND PATTERN DIMENSION OF PCB
(PCB THICKNESS:t=1.6mm)

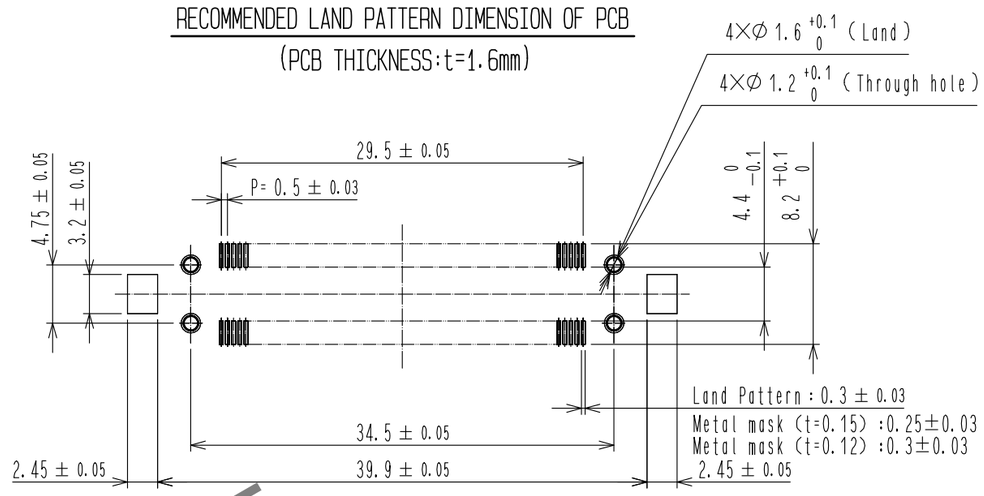

6 PCB DISTANCE (No scale)

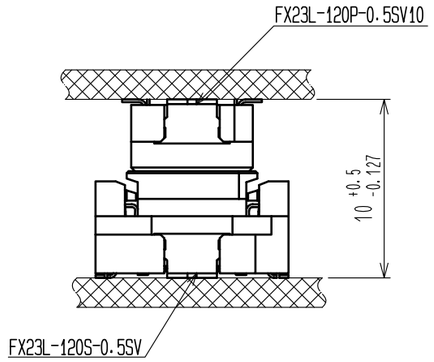

HRS DRAWING FOR REFERENCE

2 DRAWING FOR PACKING (No scale)

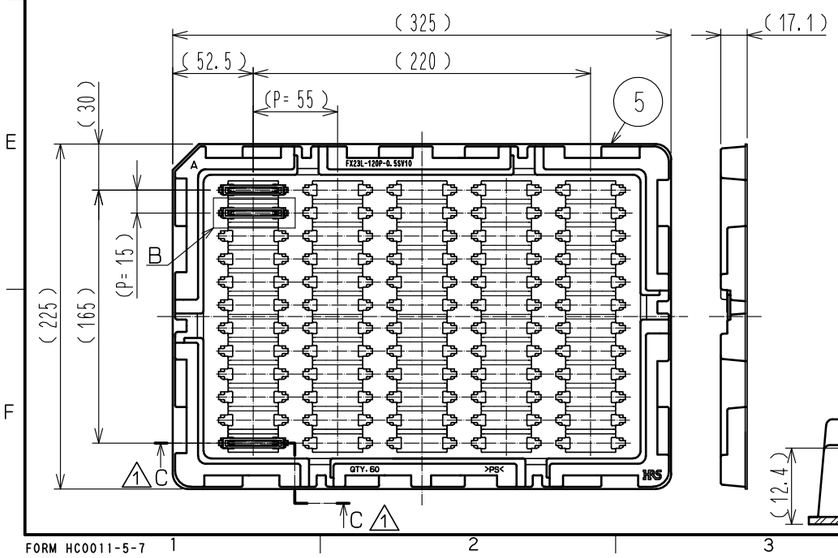

B(1:1)

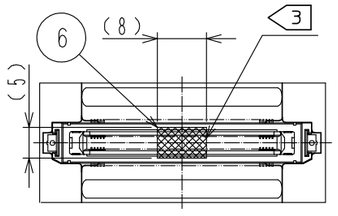

1 C−C(1:1)

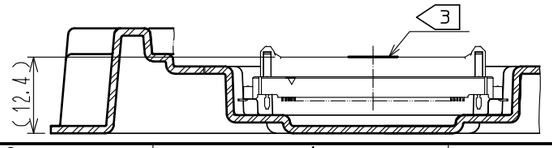

Note
1 Lead CO-Planarity is 0.1mm MAX.
2 This is packaged in tray.(60pcs/tray)
3 It shows the vacuum pickup area. Remove the mylar tape before mating connectors.
4 Blemish and hit mark can be occured through out the manufacturing process which doesn't affect quality level.
5 The dimensions in parentheses are for references.
6 Please use the connectors within the specified PCB distance.

NO.	MATERIAL	FINISH , REMARKS
2	COPPER ALLOY	CONTACT AREA:GOLD 0.1μm LEAD AREA:GOLD 0.03μm UNDER PLATING:NICKEL 1.3μm
1	POLYAMIDE	BLACK UL94V-0

NO.	MATERIAL	FINISH , REMARKS
6	POLYIMIDE	(TAPE FOR VACUUM PICKUP)
5	POLYSTYRENE	(TRAY)
4	BRASS	TIN-PLATING 1μm
3	COPPER ALLOY	CONTACT AREA:GOLD 0.1μm LEAD AREA:TIN-PLATING 1μm UNDER PLATING:NICKEL 1.3μm

UNITS	SCALE	COUNT	DESCRIPTION OF REVISIONS	DESIGNED	CHECKED	DATE
mm	2 : 1	1 3	DIS-F-00000834	TS.OONO	KN.SHIBUYA	15.11.10

HRS HIROSE ELECTRIC CO., LTD.

APPROVED	: HS.OKAWA	15.05.12	DRAWING NO.	EDC3-358055-00
CHECKED	: KN.SHIBUYA	15.05.12	PART NO.	FX23L-120P-0.5SV10
DESIGNED	: TS.OONO	15.05.12		
DRAWN	: Wonsuk.Yoon	15.05.11	CODE NO.	CL573-2106-3-00

1 1/1

FORM HC0011-5-7