May.1.2024 Copyright 2024 HIROSE ELECTRIC CO., LTD. All Rights Reserved.
In case of consideration for using Automotive equipment / device which demand high reliability, kindly contact our sales window correspondents.

	COUNT	DESCRIPTION OF REVISIONS	BY	CHKD	DATE		COUNT	DESCRIPTION OF REVISIONS	BY	CHKD	DATE
1	1	RE-F-10583	K.S.	H.Y	05.07.06						. .
					. .						. .
					. .						. .

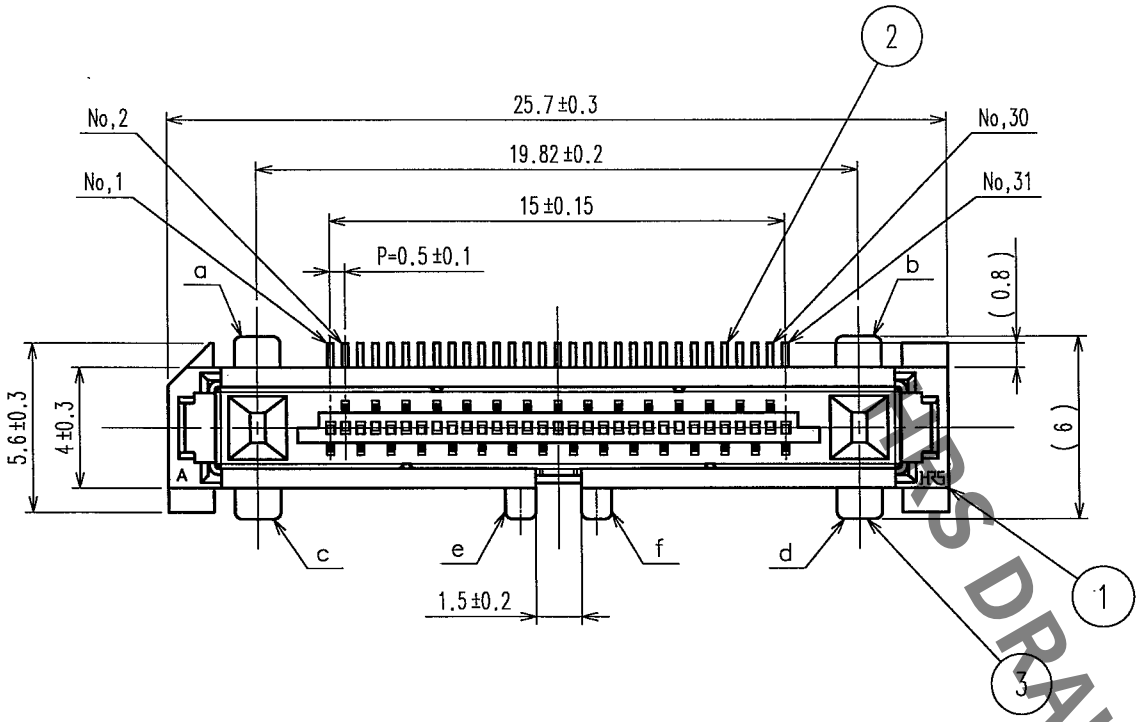

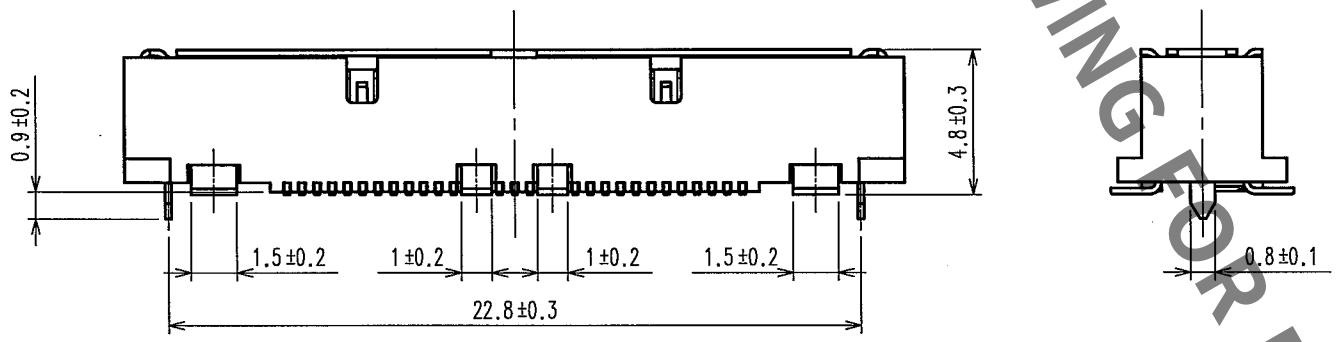

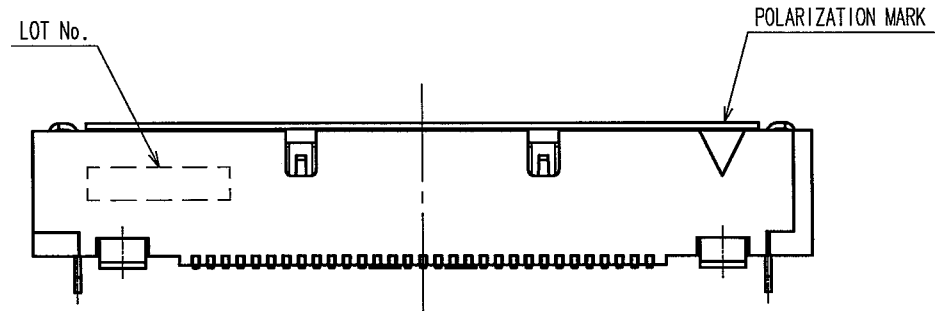

RECOMMENDED LAND PATTERN DIMENSION OF P.C.B

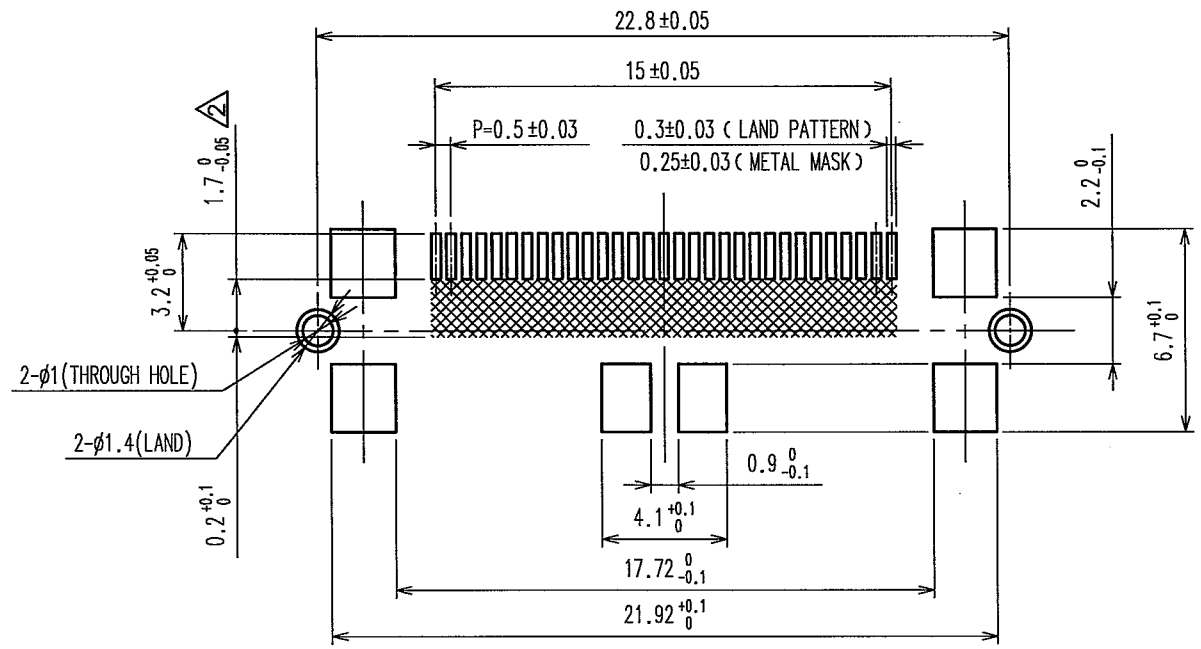

NOTE 1 LEAD-COPLANARITY OF THIS PRODUCT TO BE 0.1MAX FOR SMT LEAD AND GROUND PLATE LEAD:c,d. 0.15MAX FOR GROUND PLATE LEAD:a,b,e,f.
2 ▨ AREA OF INNER SMT LAND REQUIRES PATTERN PROHIBITION OR RESIST TREATMENT TO PREVENT THE PATTERN TOUCHING TO THE CONTACTS.
3 THE DIMENSIONS IN PARENTHESES ARE FOR REFERENCE.
4 PACKAGING FOR THIS PRODUCT APPLIES EMBOSSED CARRIER TAPE PACKAGING.SEE SHEET 2/2 FOR DETAILS.

NO.	MATERIAL	FINISH, REMARKS
3	NICKEL SILVER	
1	PA	BLACK UL94V-0

NO.	MATERIAL	FINISH, REMARKS
2	PHOSPHOR BRONZE	CONTACT AREA:GOLD 0.1μm min LEAD AREA:TIN-PLATING 1μm min UNDER PLATING:NICKEL 0.5μm min

CODE NO.(OLD)	DRAWN	DESIGNED	CHECKED	APPROVED	RELEASED
CL	K.SHIBUYA 05.01.28	K.SHIBUYA 05.01.28	H.YAMAGUCHI 05.01.31	H.OKAWA 05.01.31	. .

SCALE 4 : 1
UNITS mm
DRAWING NO. EDC3-155329
HRS HIROSE ELECTRIC CO., LTD
PART NO. FX15-31S-0.5SV
CODE NO. CL575-2201-7
1/2

TO

HRS DRAWING FOR REFERENCE

FORM NO.229

May.1.2024 Copyright 2024 HIROSE ELECTRIC CO., LTD. All Rights Reserved.
In case of consideration for using Automotive equipment / device which demand high reliability, kindly contact our sales window correspondents.

	COUNT	DESCRIPTION OF REVISIONS	BY	CHKD	DATE		COUNT	DESCRIPTION OF REVISIONS	BY	CHKD	DATE
△					. .	△					. .
△					. .	△					. .
△					. .	△					. .

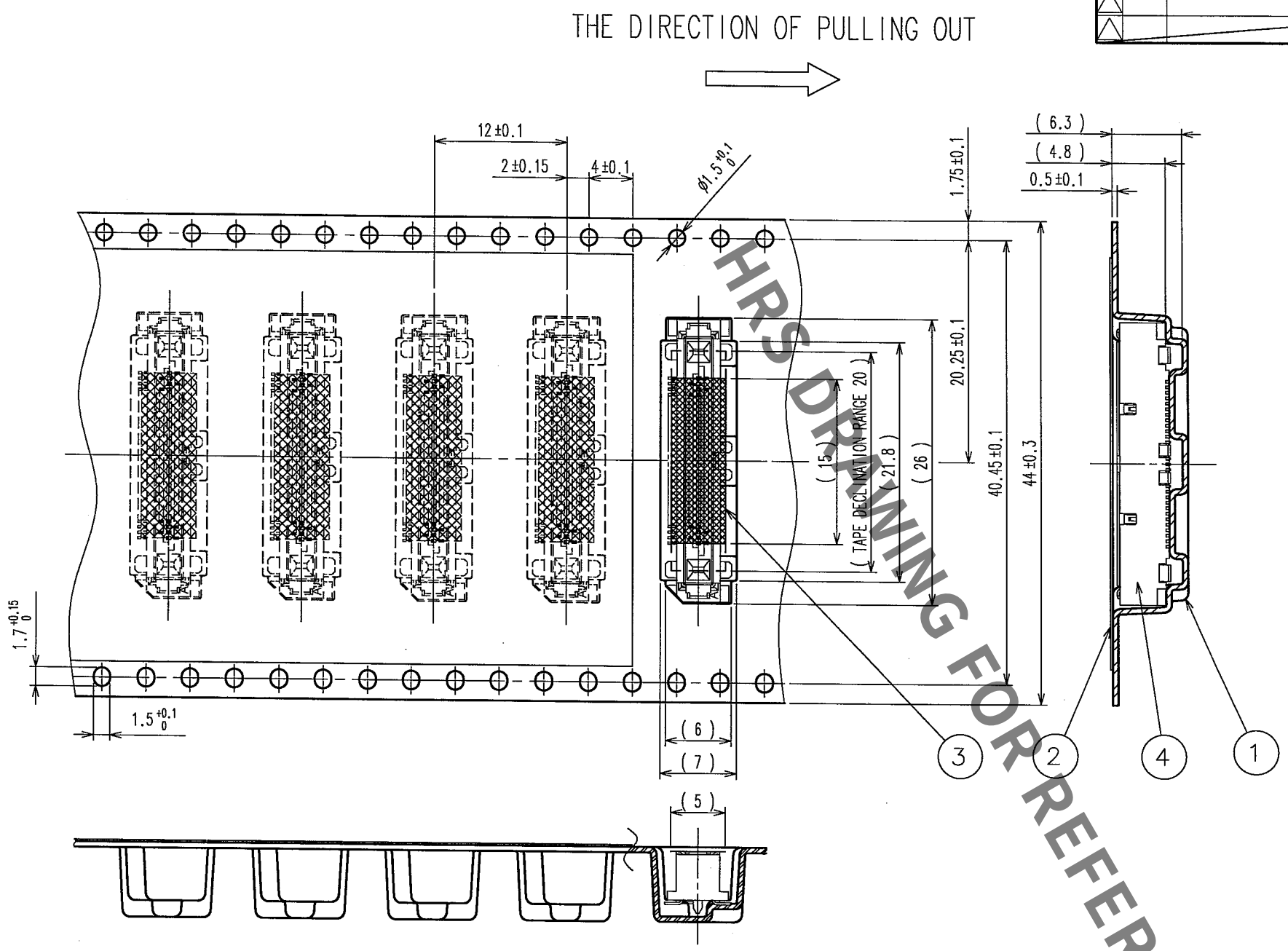

HRS DRAWING FOR REFERENCE

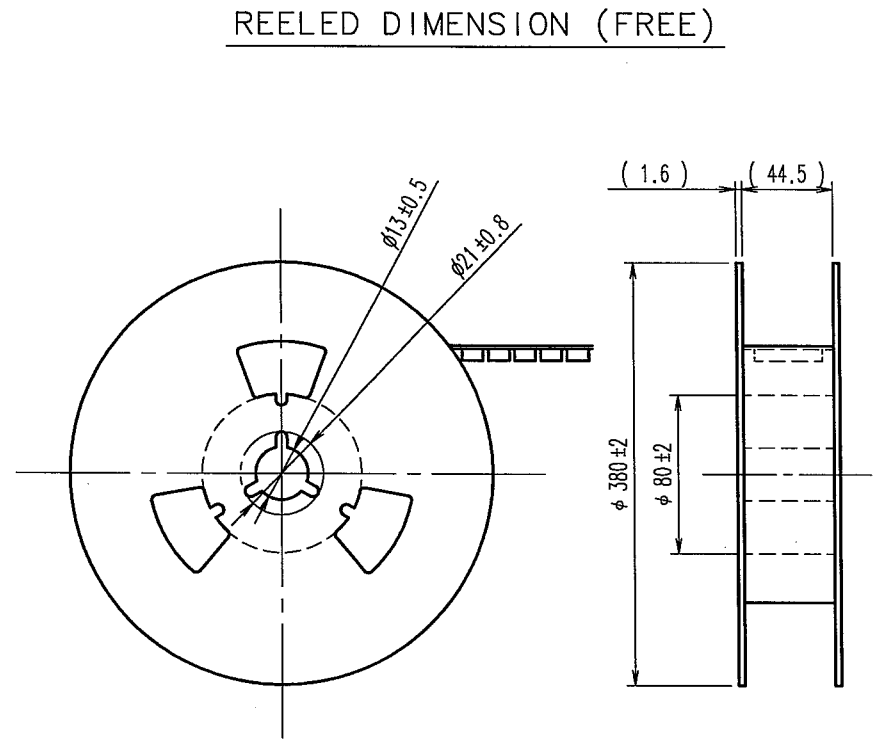

NOTE 1 1REEL:1000 CONNECTORS.

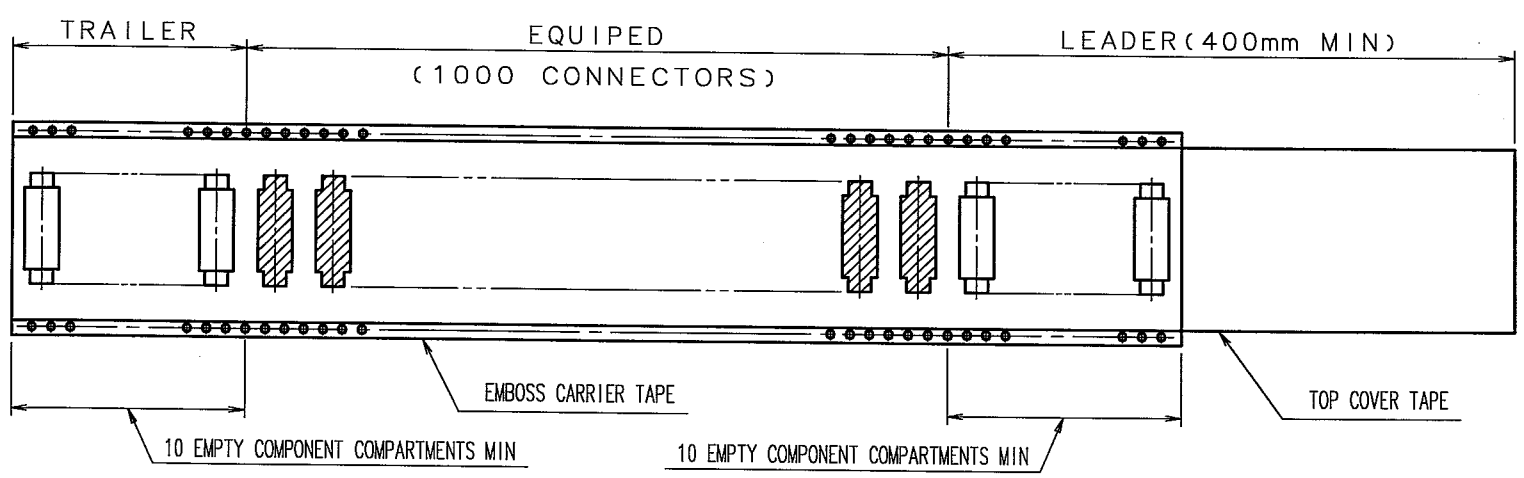

TO

NO.	MATERIAL	FINISH, REMARKS	NO.	MATERIAL	FINISH, REMARKS
2	POLYESTER	TOP COVER TAPE	4	———	CONNECTOR
1	PS	EMBOSS CARRIER TAPE	3	POLYIMIDE	TAPE FOR VACUUM PICKUP

CODE NO.(OLD)	DRAWN	DESIGNED	CHECKED	APPROVED	RELEASED
CL	K.SHIBUYA 05.01.28	K.SHIBUYA 05.01.28	H.YAMAGUCHI 05.01.31	H.OKAWA 05.01.31	. .

SCALE 2 : 1	DRAWING NO. EDC3-155329	PART NO. FX15-31S-0.5SV
UNITS mm	HRS HIROSE ELECTRIC CO., LTD	CODE NO. CL575-2201-7 2/

FORM NO.229