May.1.2024 Copyright 2024 HIROSE ELECTRIC CO., LTD. All Rights Reserved.
In case of consideration for using Automotive equipment / device which demand high reliability, kindly contact our sales window correspondents.

	COUNT	DESCRIPTION OF REVISIONS	BY	CHKD	DATE		COUNT	DESCRIPTION OF REVISIONS	BY	CHKD	DATE
△					. .	△					. .
△					. .	△					. .
△					. .	△					. .

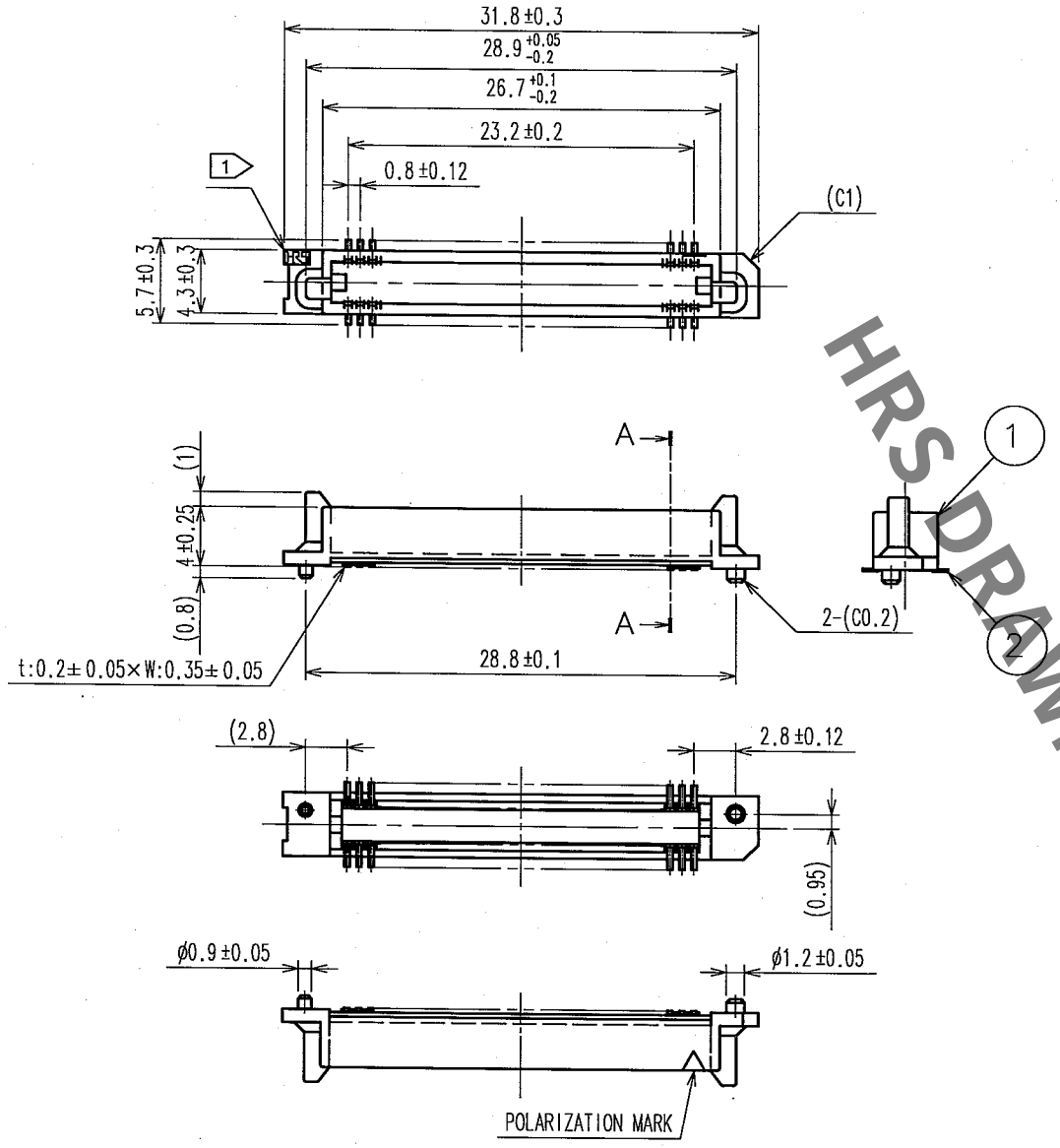

A-A (10:1)

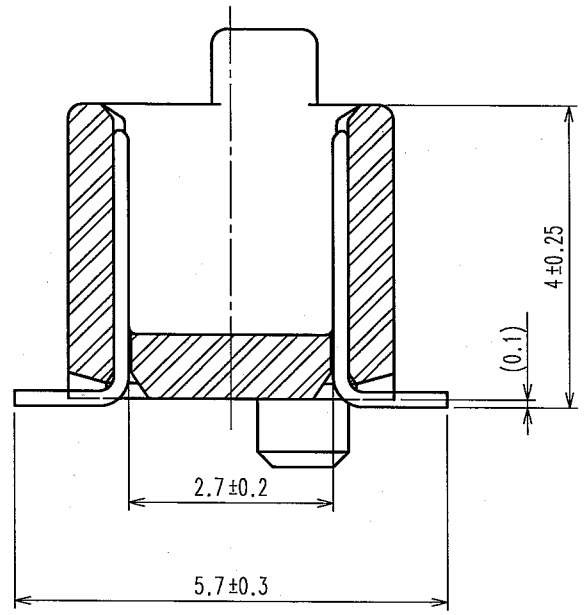

NOTE 1 HRS MARK SHALL BE OPTIONAL.
2 LEAD CO-PLANARITY SHALL BE 0.1mm MAX.
3 EMBOSSED CARRIER TAPE PACKAGING SHALL BE APPLIED TO THIS PRODUCT. SEE NEXT PAGE FOR DETAILS.
4 THIS PRODUCT HAS TAPE FOR VACUUM PICKUP. SEE NEXT PAGE FOR DETAIL OF STICKING POSITION,ETC.
5 FOR MODIFICATION,ETC,PREVENTIVE HOLE FOR SINK MARK MAY BE ADDED ACCORDING TO CIRCUMSTANCES.
6 THE DIMENSIONS IN PARENTHESES ARE FOR REFERENCE.

RECOMMENDED LAND PATTERN DIMENSION OF PCB (MOUNTING SIDE)

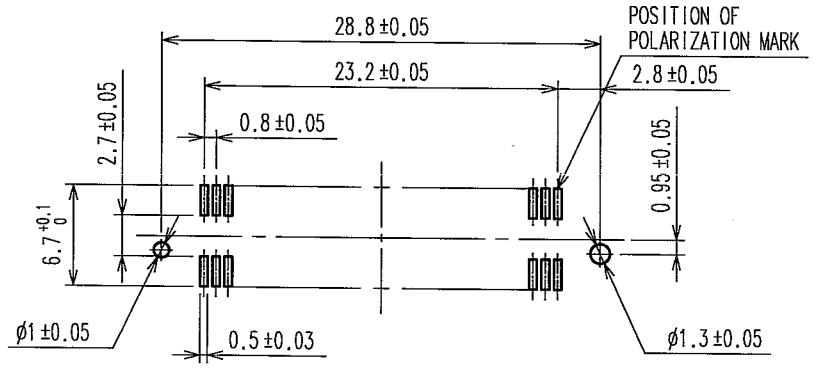

HRS DRAWING FOR REFERENCE

NO.	MATERIAL	FINISH, REMARKS	NO.	MATERIAL	FINISH, REMARKS
1	PPS	LIGHT BROWN (UL94V-0)	2	PHOSPHOR BRONZE	CONTACT AREA:GOLD 0.1μm min. LEAD AREA:GOLD FLASH UNDER PLATING:NICKEL 1μm min.

CODE NO.(OLD)	DRAWN	DESIGNED	CHECKED	APPROVED	RELEASED
	K.NAKAMURA 06.01.24	K.NAKAMURA 06.01.24	K.Ozawa '06.01.25	H.Okawa '06.01.25	. .

SCALE 2 : 1
UNITS mm
DRAWING NO. EDC3-084968-23
HRS HIROSE ELECTRIC CO., LTD
PART NO. FX6-60P-0.8SV(93)
CODE NO. CL576-0005-4-93
1/2

TO

May.1.2024 Copyright 2024 HIROSE ELECTRIC CO., LTD. All Rights Reserved.
In case of consideration for using Automotive equipment / device which demand high reliability, kindly contact our sales window correspondents.

COUNT	DESCRIPTION OF REVISIONS	BY	CHKD	DATE	COUNT	DESCRIPTION OF REVISIONS	BY	CHKD	DATE
△				. .	△				. .
△				. .	△				. .
△				. .	△				. .

UNREELING DIRECTION

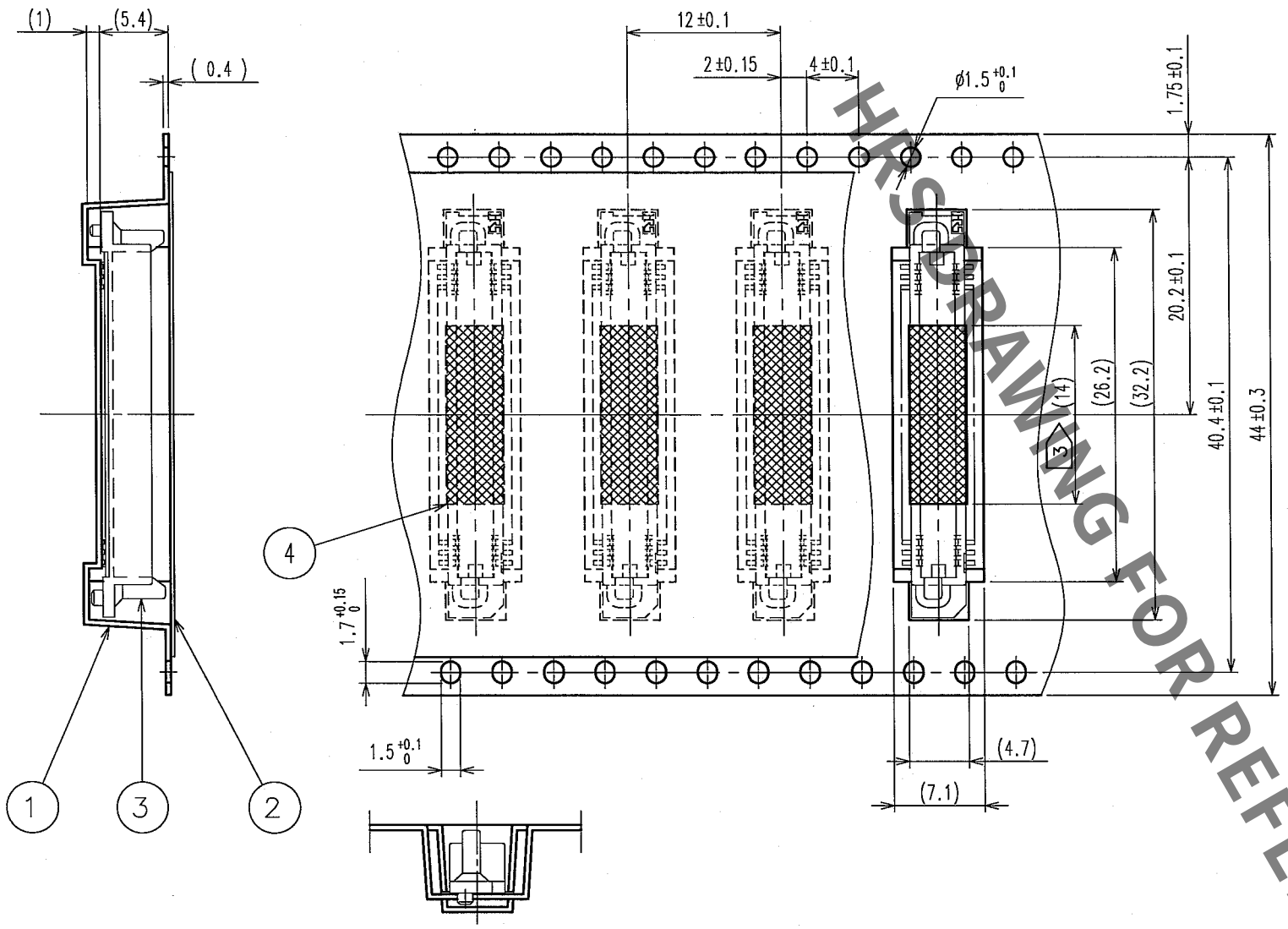

REEL DIMENSION (FREE)

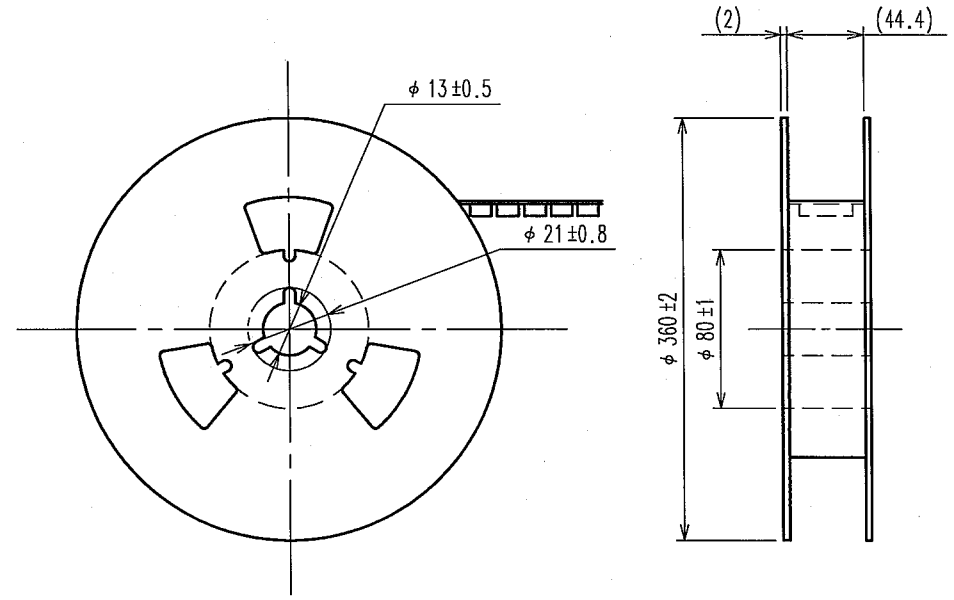

DETAIL OF TAPE FOR VACUUM PICKUP(5:1)

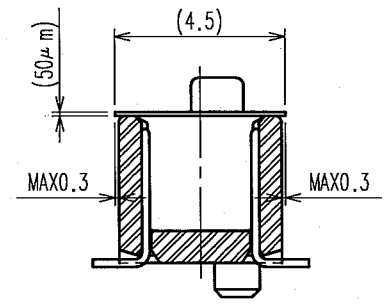

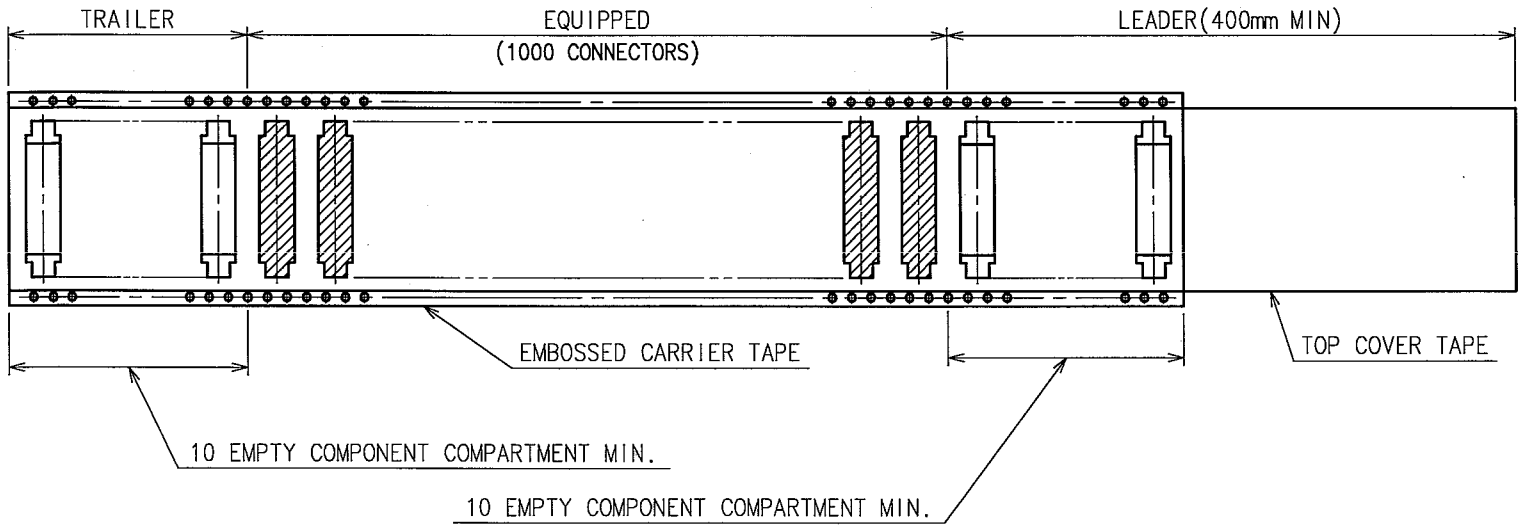

NOTE 1 1 REEL : 1000 CONNECTORS.
2 THE DIMENSIONS IN PARENTHESES ARE FOR REFERENCE.
3 REMOVE THE VACUUM PICKUP TAPE AFTER MOUNTING THE CONNECTOR.

NO.	MATERIAL	FINISH, REMARKS	NO.	MATERIAL	FINISH, REMARKS
2	POLYESTER	(TOP COVER TAPE)	4	POLYIMIDE	(TAPE FOR VUCUUM PICKUP)
1	POLYSTYRENE	(EMBOSSED CARRIER TAPE)	3		(CONNECTOR)

CODE NO.(OLD)	DRAWN	DESIGNED	CHECKED	APPROVED	RELEASED
	K.NAKAMURA 06.01.24	K.NAKAMURA 06.01.24	K. Ozawa '06.01.25	H. Okawa '06.01.25	. .

SCALE 2 : 1
UNITS mm

DRAWING NO. EDC3-084968-23

HRS HIROSE ELECTRIC CO., LTD

PART NO. FX6-60P-0.8SV(93)

CODE NO. CL576-0005-4-93

2

TO

HRS DRAWING FOR REFERENCE