Jul.1.2025 Copyright 2025 HIROSE ELECTRIC CO., LTD. All Rights Reserved.
In case of consideration for using Automotive equipment / device which demand high reliability, kindly contact our sales window correspondents.

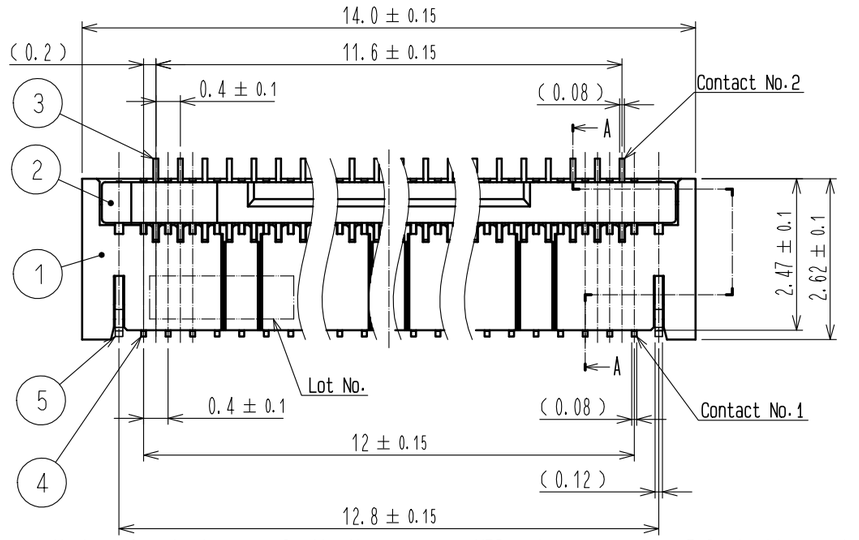

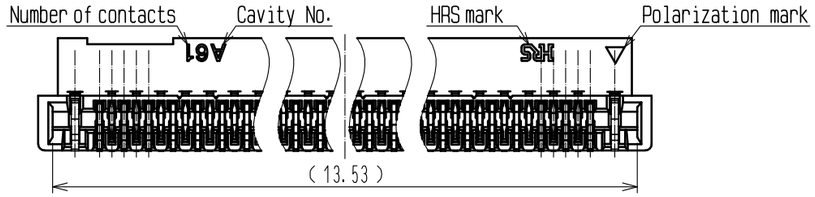

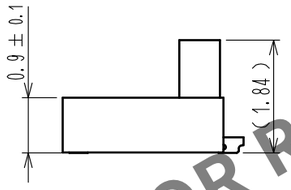

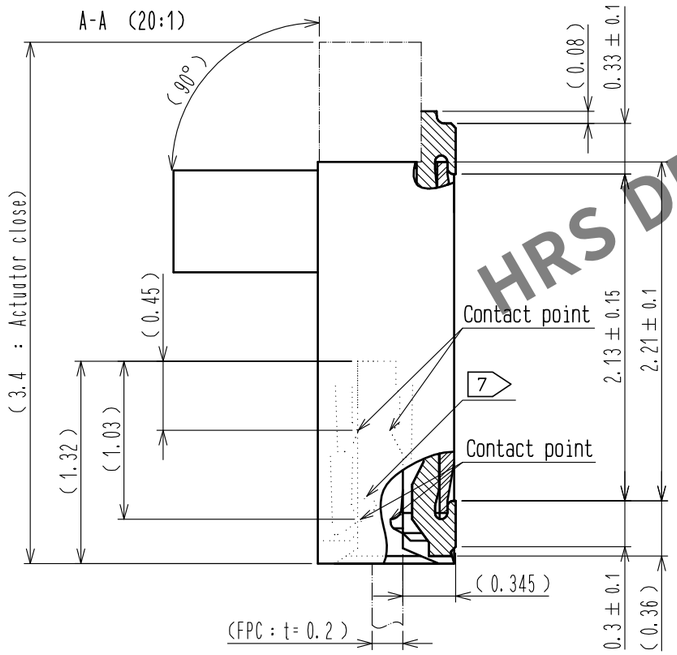

RECOMMENDED PCB MOUNTING PATTERN

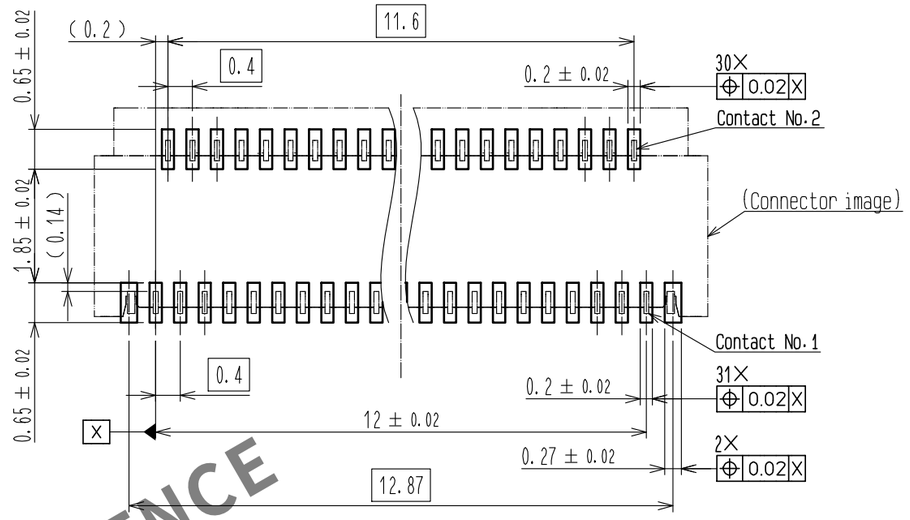

RECOMMENDED STENCIL PATTERN

(Recommended stencil thickness : t=0.1)

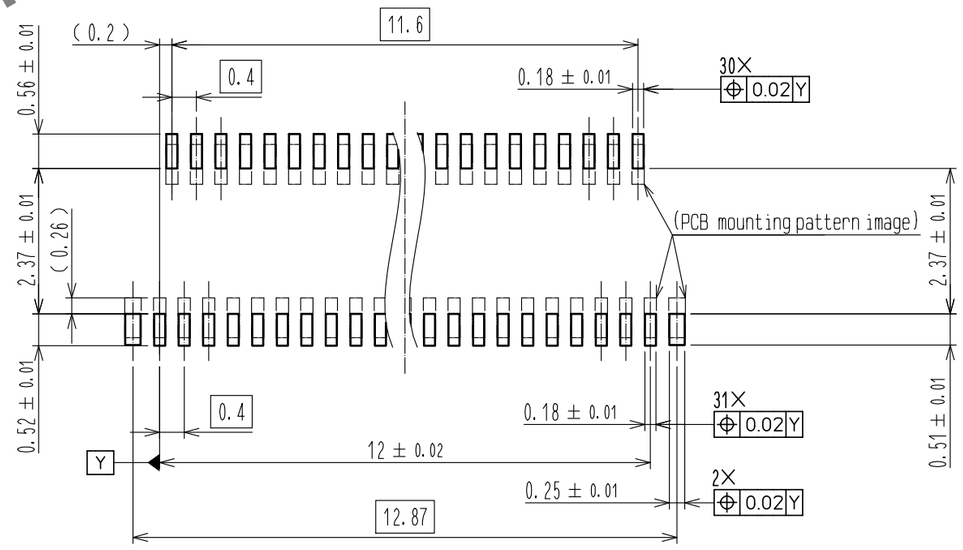

HRS DRAWING FOR REFERENCE

NO.	MATERIAL	FINISH , REMARKS	NO.	MATERIAL	FINISH , REMARKS
4	PHOSPHOR BRONZE	(CONTACT AREA·LEAD) GOLD PLATING 0.03μm MIN OVER NICKEL 1μm MIN. (OTHER) NICKEL PLATING 1μm MIN.	9	(CONNECTOR)	
			8	POLYSTYRENE	
3	PHOSPHOR BRONZE	(CONTACT AREA·LEAD) GOLD PLATING 0.03μm MIN OVER NICKEL 1μm MIN. (OTHER) NICKEL PLATING 1μm MIN.	7	POLYESTER	
			6	POLYSTYRENE	
2	PA	BLACK UL94V-0	5	PHOSPHOR BRONZE (PLATED MATERIAL)	TIN PLATING (REFLOW FINISHED)1μm MIN.
1	LCP	BEIGE UL94V-0			

NOTES
1. The dimension in parentheses are for reference.
2. Lead co-planarity including reinforced chucking metals shall be 0.1 max.
3. To be delivered with tape and reel packages.
   see attached packaging specifications for details.
4. Note that preventive hole for sink mark or slit could be added for improvement.
5. The quality remains good, even with the dark spots, which could occasionally occur on molded plastic.
6. This product satisfies halogen free requirements defined as 900ppm maximum chlorine, 900ppm maximum bromine, and 1500ppm maximum total of chlorine and bromine.

7 Shows hook part of the chucking metal.

UNITS	SCALE	COUNT	DESCRIPTION OF REVISIONS	DESIGNED	CHECKED	DATE
mm	10 : 1	0				

HRS HIROSE ELECTRIC CO., LTD.

APPROVED	: HY. YAMAZAKI	20230714	DRAWING NO.	EDC-403028-00-00
CHECKED	: HY. YAMAZAKI	20230714	PART NO.	FH58SA-61S-0.2SHW
DESIGNED	: TS. WADA	20230714	CODE NO.	CL0580-3835-0-00
DRAWN	: TS. WADA	20230714		0 1/8

Jul.1.2025 Copyright 2025 HIROSE ELECTRIC CO., LTD. All Rights Reserved.
In case of consideration for using Automotive equipment / device which demand high reliability, kindly contact our sales window correspondents.

RECOMMENDED FPC (20:1)

(Exposed conductor area thickness:t=0.20±0.02)

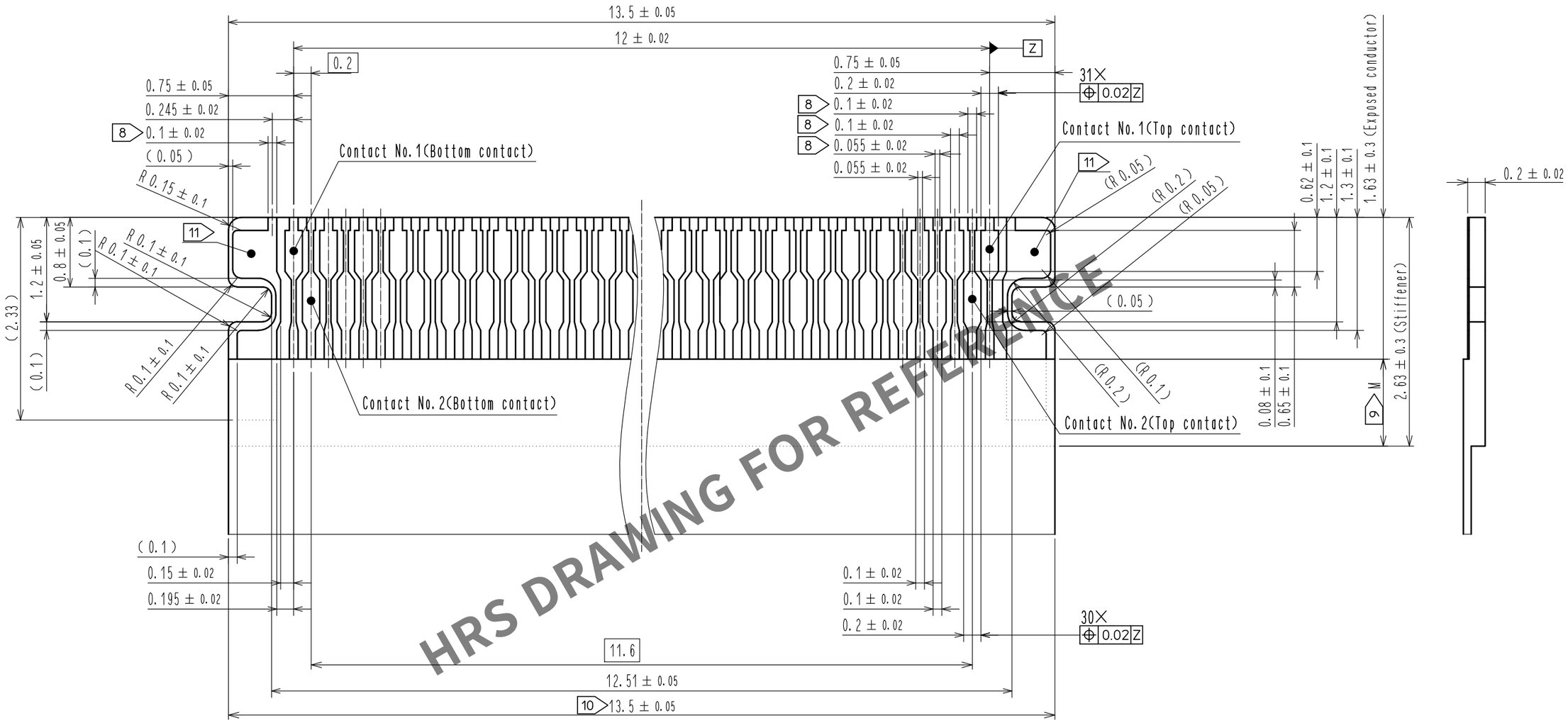

HRS DRAWING FOR REFERENCE

FPC CONFIGURATION (REFERENCE EXAMPLE)

(FREE)

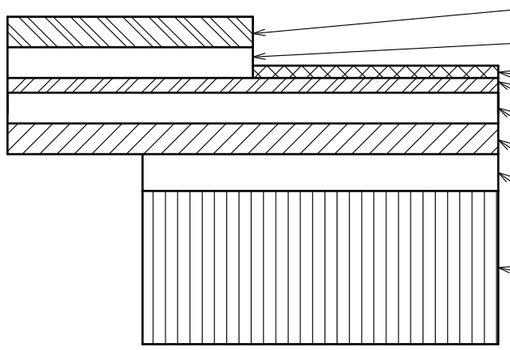

MATERIAL NAME	MATERIAL	THICKNESS(μm)
Covering film layer.	Polyimide 1mil	25
Cover adhesive		25
Surface treatment	1μm to 6μm nickel underplated 0.2μm gold plated	(4)
Copper foil	Cu 1/2 oz	18
Base adhesive	Heat-hardened adhesive	No adhesion material
Base film	Polyimide 1mil	25
Reinforcement material adhesive	Heat-hardened adhesive	30
Stiffener	Polyimide 5mil	125

NOTES
8 Shows recommended dimension when lead for plating is required.
9 Dimention M must be 0.5mm minimum.
10 Indicated tolerance is applicable to the exposed conductor.
11 Both end side of contact pad on FPC can not be used for signal transmission.
12 Recommended puncher direction: From conductor side to stiffener side.

<RECOMMENDED FPC>

HRS	DRAWING NO.	EDC-403028-00-00
	PART NO.	FH58SA-61S-0.2SHW
	CODE NO.	CL0580-3835-0-00

0 2/8

Jul.1.2025 Copyright 2025 HIROSE ELECTRIC CO., LTD. All Rights Reserved.
In case of consideration for using Automotive equipment / device which demand high reliability, kindly contact our sales window correspondents.

EMBOSSED CARRIER TAPE DIMENSION (5:1)

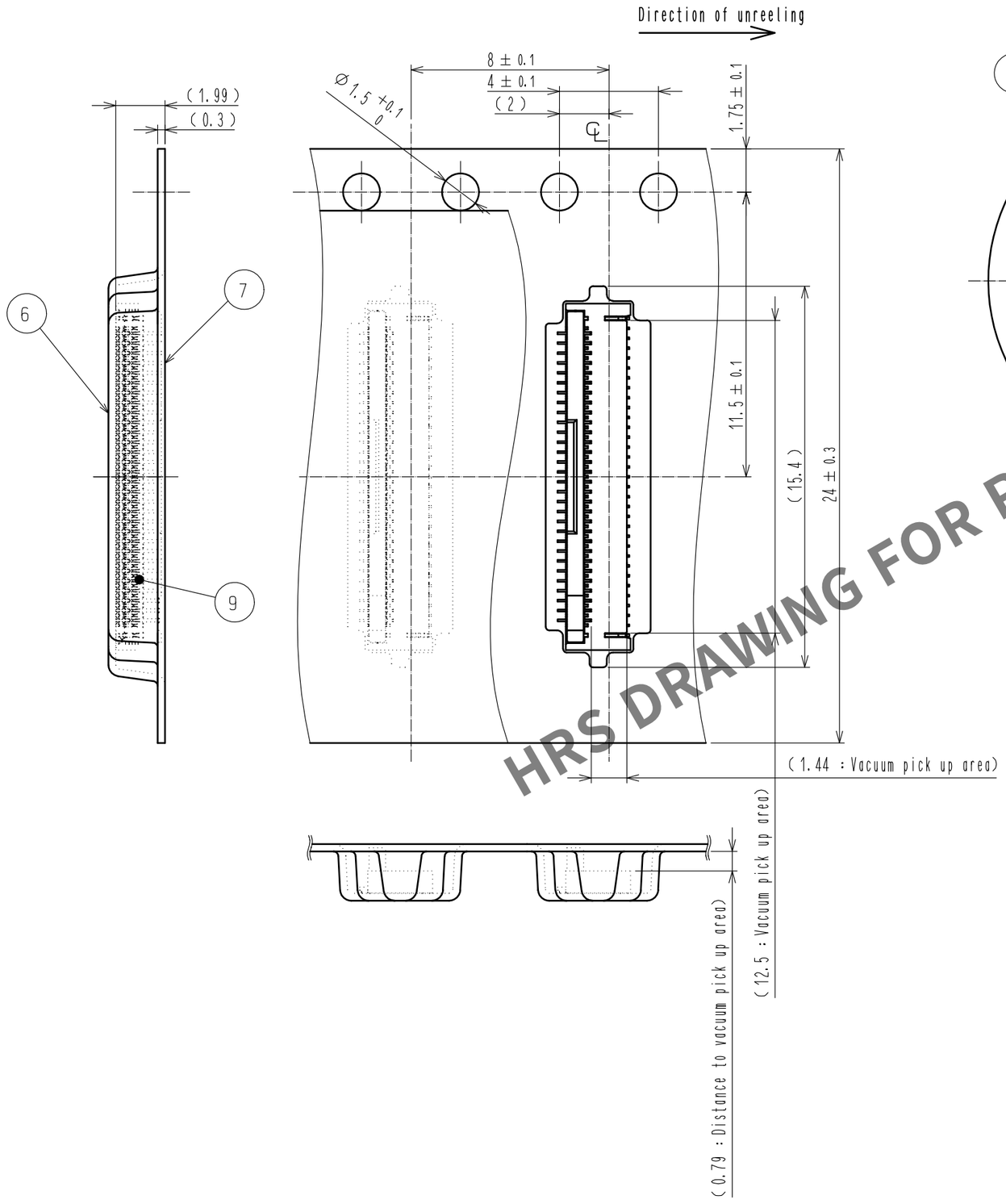

REEL DIMENSION (FREE)

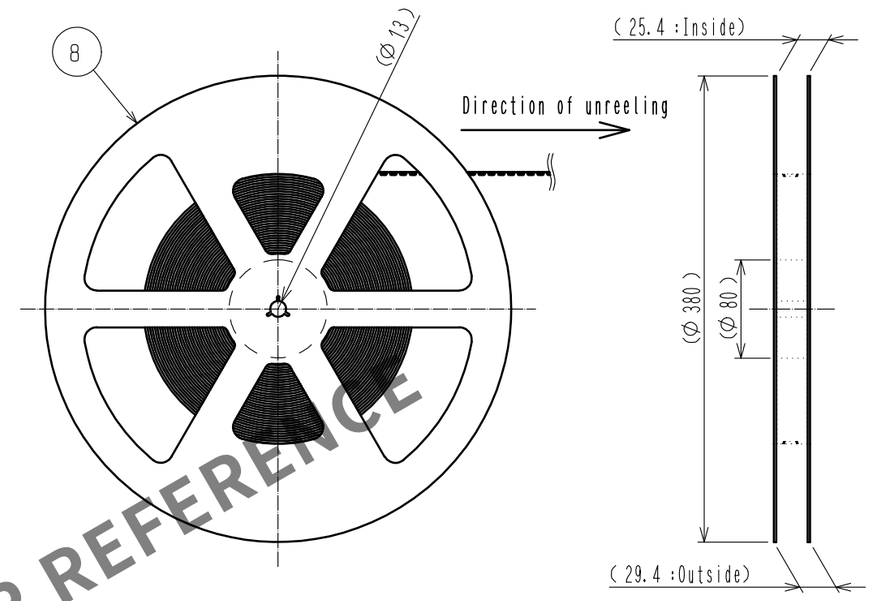

NOTES 13. Per reel : 5000 connectors.
14. Refer to JIS C 0806 and IEC 60286-3.
(Packaging of components for automatic handling)

LEADER, TRAILER DIMENSION (FREE)

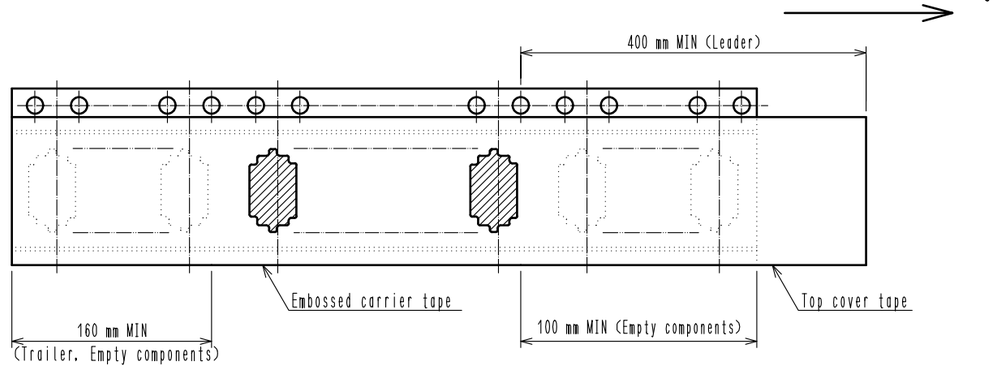

HRS DRAWING FOR REFERENCE

<PACKING SPACIFICATIONS>

HRS	DRAWING NO.	EDC-403028-00-00
	PART NO.	FH58SA-61S-0.2SHW
	CODE NO.	CL0580-3835-0-00

0 3/8

FORM HC0011-5-8

Jul.1.2025 Copyright 2025 HIROSE ELECTRIC CO., LTD. All Rights Reserved.
In case of consideration for using Automotive equipment / device which demand high reliability, kindly contact our sales window correspondents.

This connector features small and thin, requiring delicate and careful handling.
To prevent connector/FPC breakege and contact failure (meting failure, FPC pattern breakage, etc), read through the instructions shown below and handle the connector properly.

[Connector Part Nomenclature]

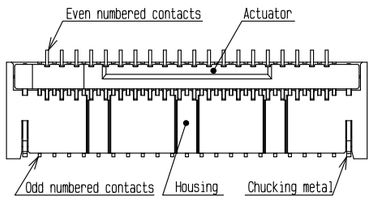

Top view

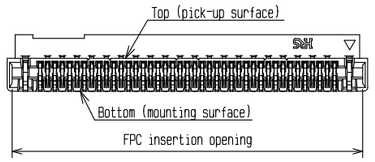

Front view

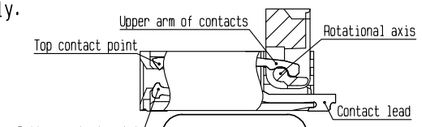

Even numbered contact view

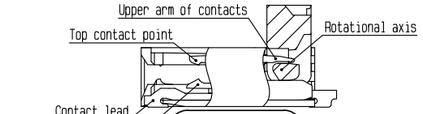

Odd numbered contact view

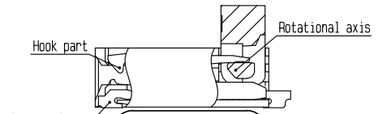

Chucking metal view

[Operation and Precautions]

1. Initial condition

Actuator does not have to be operated before inserting FPC, as the connector is delivered with the actuator opened.

[Caution]
-Do not close the actuator before inserting FPC.
Closing the actuator without FPC could make the contact gap smaller, which could increase the FPC insertion force.(Example1)
-Do not insert FPC or operate actuator before mounting.(Example1)

Example1

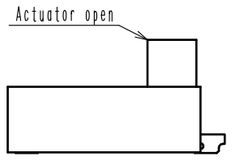

- Open when deliverd -

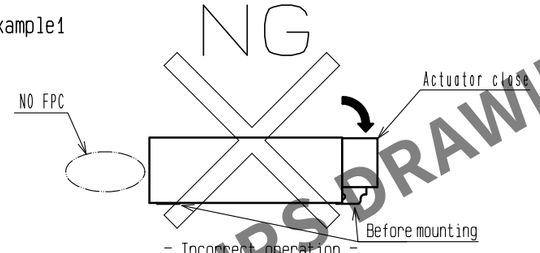

- Incorrect operation -

2. How to insert FPC

Insert the FPC into the connector opening horizontally to the PCB plane.
Insert it properly to the very end.(Example2)

[Caution]
-Do not insert the FPC with the actuator closed.(Example3)
-Do not twist the FPC to up and down, right and left or an angle.(Example4)

Example2

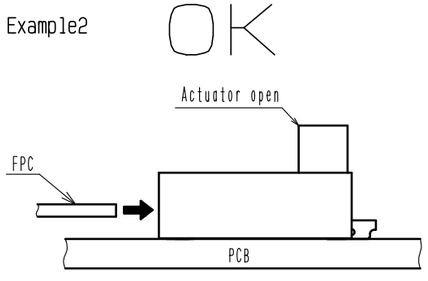

- Correct operation -

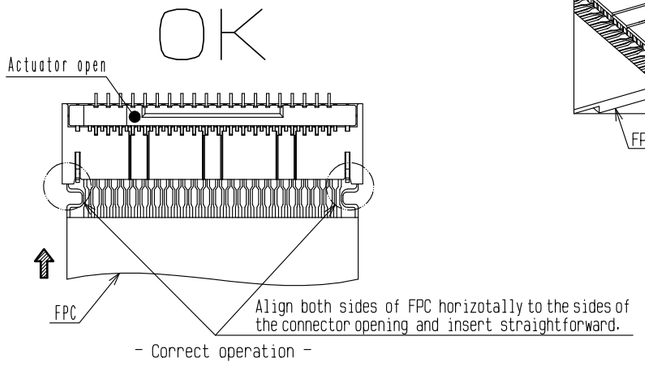

- Correct operation -

Example3

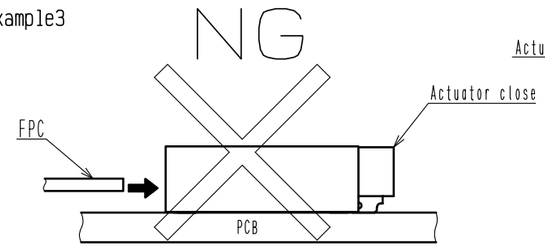

- Incorrect operation -

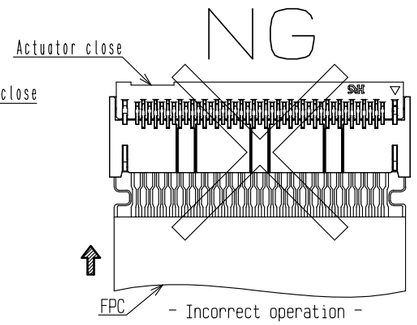

- Incorrect operation -

Example4

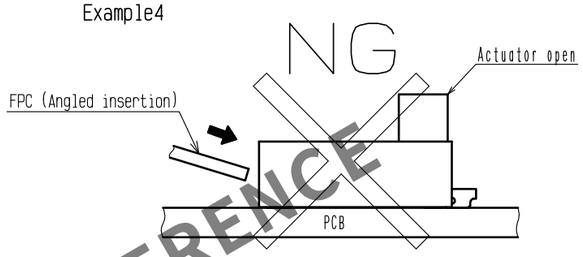

- Incorrect operation -

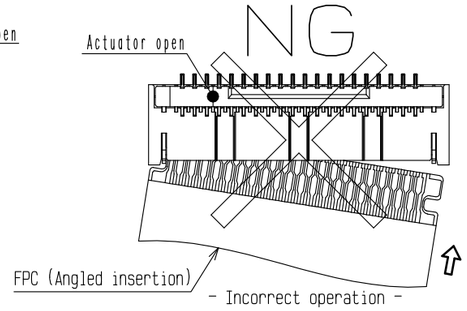

- Incorrect operation -

3. FPC insertion check

Chucking metals guide the FPC tabs to the correct position.
Make sure that the FPC tabs are located in proper position as shown in the figure below after FPC insertion.(Example5)

[Caution]
-Do not insert the FPC at an angle and/or stop it before insertion is completed.(Example6)(Example7)

Example5

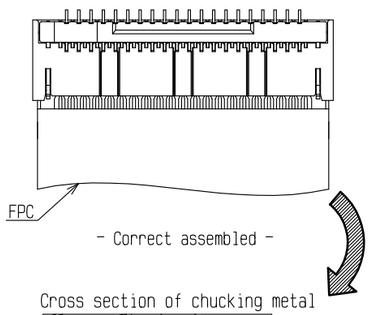

- Correct assembled -

Example6

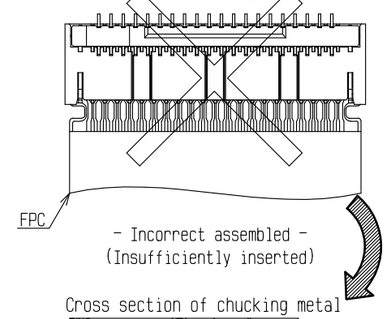

- Incorrect assembled -
(Insufficiently inserted)

Example6

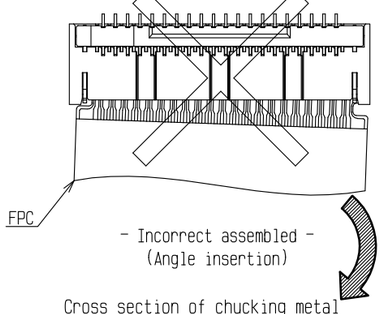

- Incorrect assembled -
(Angle insertion)

Cross section of chucking metal

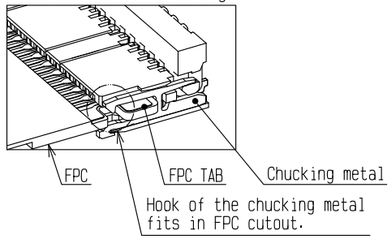

Cross section of chucking metal

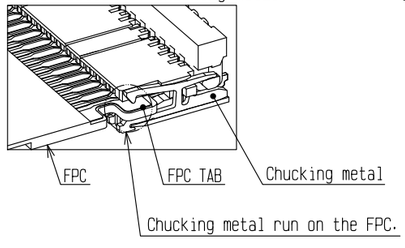

Cross section of chucking metal

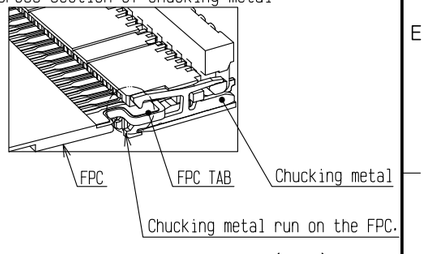

HRS DRAWING FOR REFERENCE

<INSTRUCTION MANUAL(1)>

DRAWING NO.	EDC-403028-00-00
PART NO.	FH58SA-61S-0.2SHW
CODE NO.	CL0580-3835-0-00

0 4/8

Jul.1.2025 Copyright 2025 HIROSE ELECTRIC CO., LTD. All Rights Reserved.
In case of consideration for using Automotive equipment / device which demand high reliability, kindly contact our sales window correspondents.

4. How to lock

The actuator rotates around the rotational axis as shown below.
Apply load to rotate the actuator by 90 degree after inserting the FPC. (Example8)

[Caution]
- To close the actuator, operate at the center of the actuator. (Example9)
- To close the actuator, do not operate the actuator at one end only. (Example10)
- Do not rotate the actuator to the counter direction. (Example11)
- Do not push out the actuator horizontally. (Example12)
- Do not operate the actuator while the upper contact arm is pressed down. (Example13)
- Do not pick the actuator to lift. (Example14)
- Operate the actuator by hand without using sharp tool such as Tweezers. (Example15)
- Do not apply excess force to the housing during the operation. (Example16)

Example8 [Actuator movable range] (Side view)

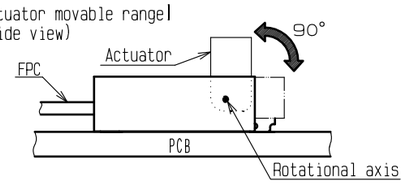

Example9 OK

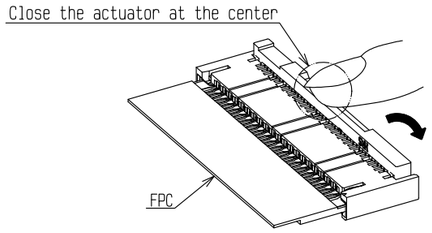

- Correct operation -

Example10 NG

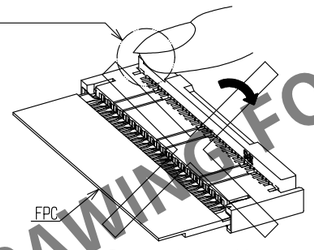

- Incorrect operation -

Example11 NG

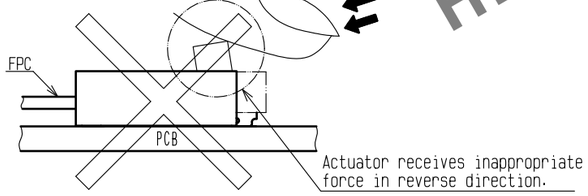

- Incorrect operation -

Example12 NG

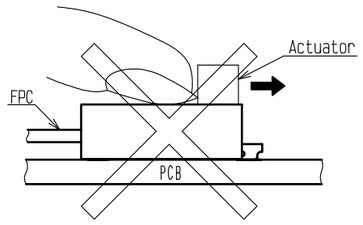

- Incorrect operation -

Example13 NG

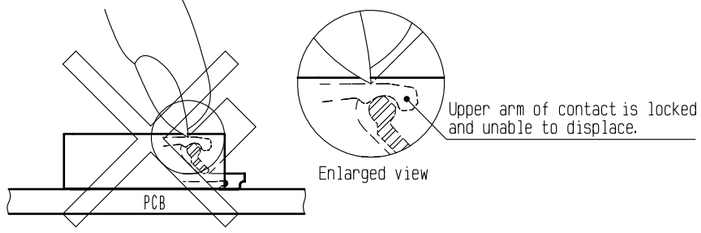

- Incorrect operation -

Example14 NG

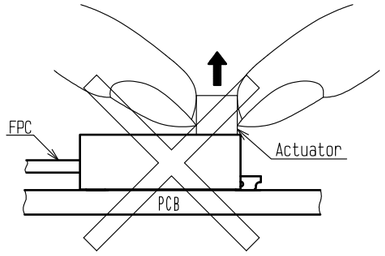

- Incorrect operation -

Example15 NG

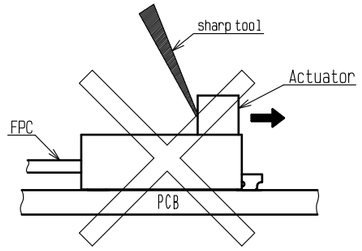

- Incorrect operation -

Example16 NG

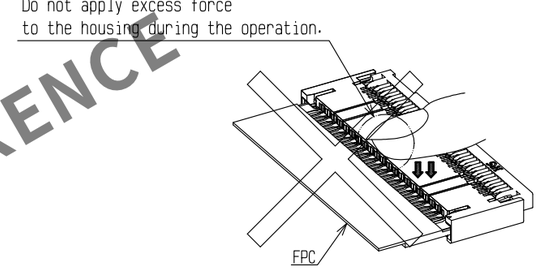

- Incorrect operation -

5. Mating confirmation of the FPC

Visually confirm the FPC positioning after closing the actuator. (Example17)

[Caution]
- Do not insert the FPC at an angle and/or stop it before insertion is completed. (Example18)(Example19)

Example17

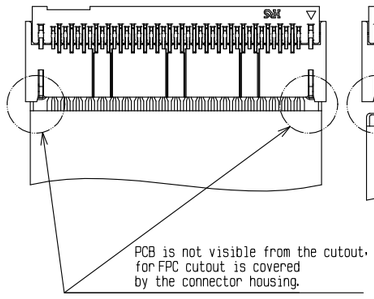

- Correct assembled -

OK

Example18

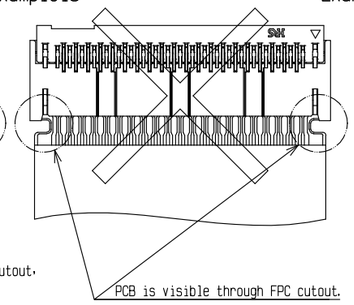

- Incorrect assembled -
(Insufficiently inserted)

NG

Example19

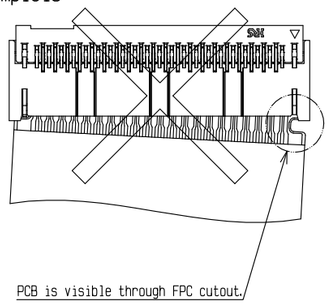

- Incorrect assembled -
(Angle insertion)

NG

HRS DRAWING FOR REFERENCE

<INSTRUCTION MANUAL(2)>

HRS	DRAWING NO.	EDC-403028-00-00
	PART NO.	FH58SA-61S-0.2SHW
	CODE NO.	CL0580-3835-0-00

Jul.1.2025 Copyright 2025 HIROSE ELECTRIC CO., LTD. All Rights Reserved.
In case of consideration for using Automotive equipment / device which demand high reliability, kindly contact our sales window correspondents.

6. How to unlock

Slowly flip up the actuator to release the lock.(Example20)

[Caution]
-To open the actuator, operate at the center of the actuator.(Example21)
-To open the actuator, do not operate the actuator at one end only.(Example22)
-The actuator is opened up to the movable limit, 90 degree.(Example23)
Do not open the actuator beyond the specified degree or apply excess force to the actuator.
-Open the actuator right above.
Do not attempt to open further or to open it by applying horizontal force as this may cause its damage.(Example24)
-Do not pick the actuator to lift.(Example25)
-Operate the actuator by hand without using sharp tool such as Tweezers.(Example26)
-Do not apply excess force to the housing during the operation.(Example27)
-Please note that the connector is back flip style connector,
and the opening for FPC insertion and the actuator face the opposite direction.
Do not try to lift the actuator at the FPC insertion opening side.(Example28)

Example20 OK

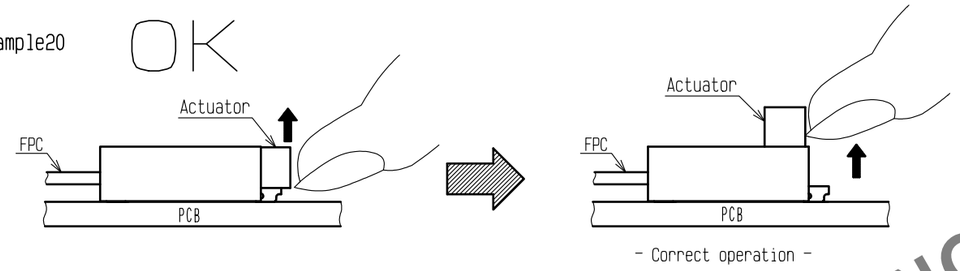

- Correct operation -

Example21 OK

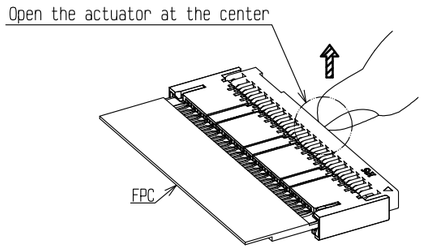

- Correct operation -

Example22 NG

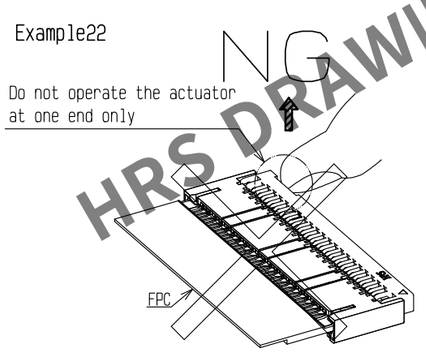

- Incorrect operation -

Example23 NG

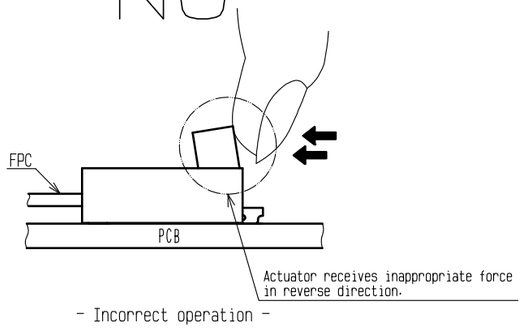

- Incorrect operation -

Example24 NG

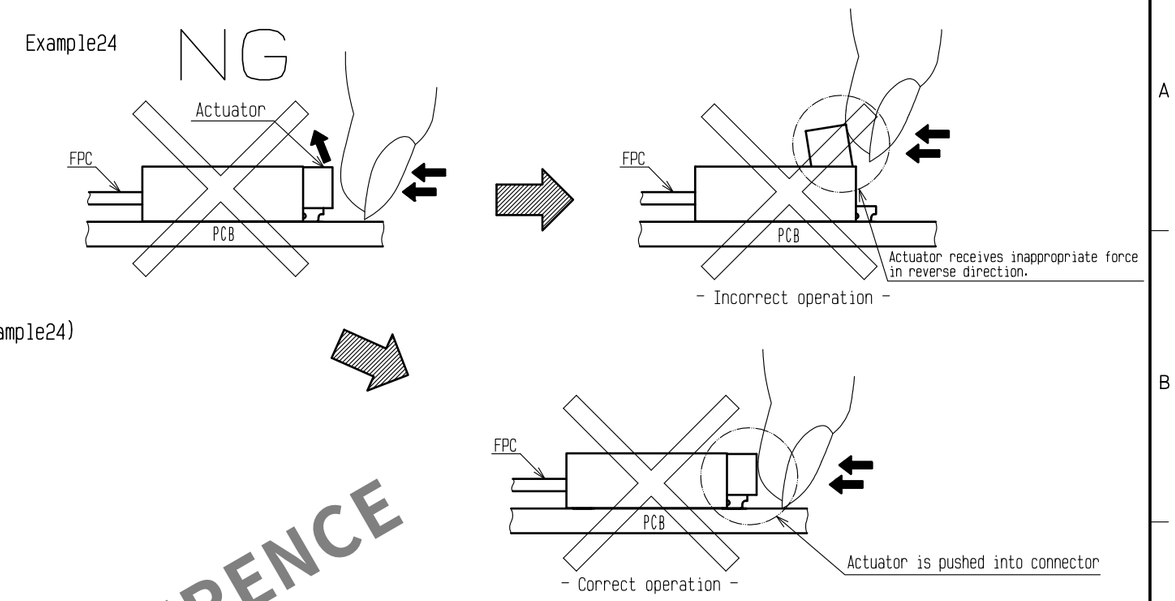

- Incorrect operation -
- Correct operation -

Example25 NG

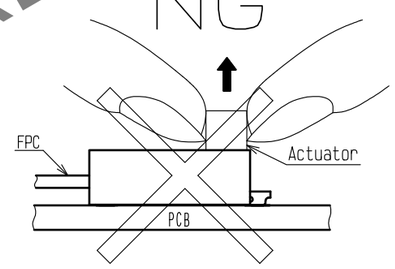

- Incorrect operation -

Example26 NG

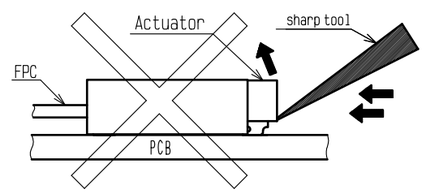

- Incorrect operation -

Example27 NG

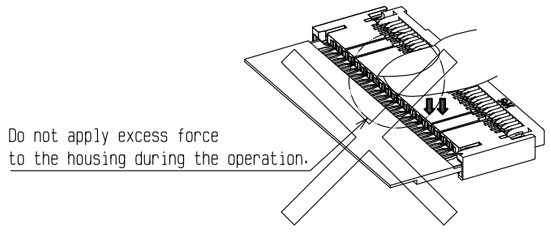

- Incorrect operation -

Example28 NG

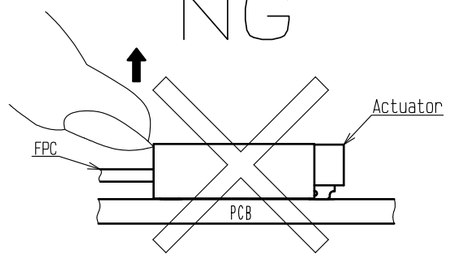

- Incorrect operation -

HRS DRAWING FOR REFERENCE

<INSTRUCTION MANUAL(3)>

HRS	DRAWING NO.	EDC-403028-00-00
	PART NO.	FH58SA-61S-0.2SHW
	CODE NO.	CL0580-3835-0-00

0 6/8

Jul.1.2025 Copyright 2025 HIROSE ELECTRIC CO., LTD. All Rights Reserved.
In case of consideration for using Automotive equipment / device which demand high reliability, kindly contact our sales window correspondents.

7. How to remove FPC

After rotating the actuator to the fully opened position carefully withdraw the FPC pulling out horizontally.(Example29)

[Caution]
-This connector has a temporary FPC holding structure with chucking metals.
For FPC removal,do not pull out the FPC upward or angled direction.(Example30)
-Do not attempt to pull the FPC without unlocking the actuator(Example31).

Example29

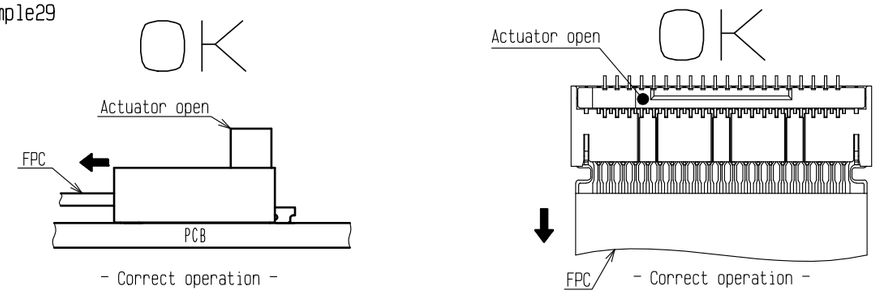

Example30

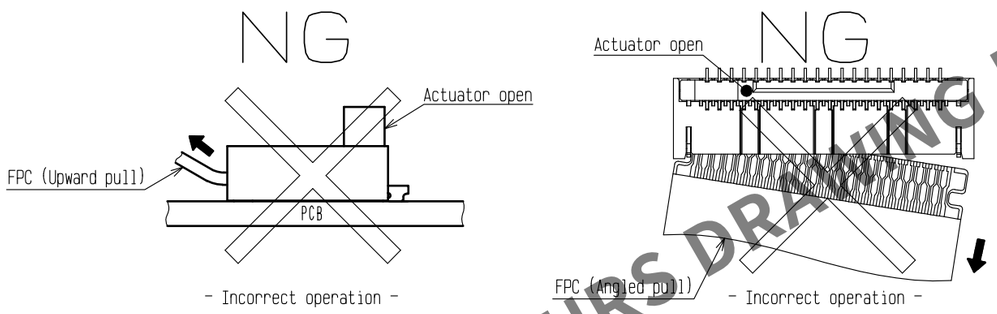

Example31

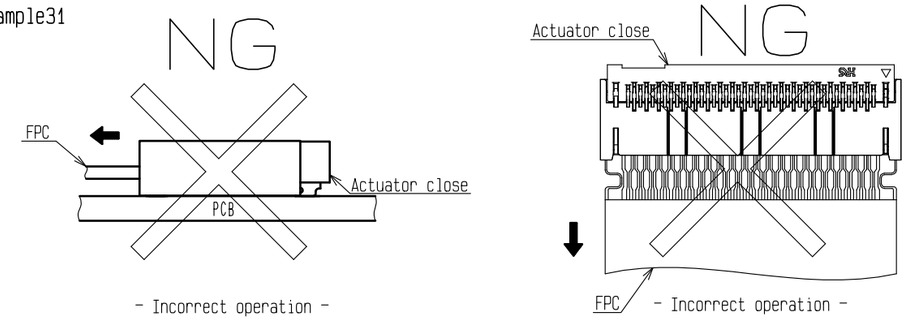

[Precautions for component layout]

Depending on a FPC rounding, a load is applied to the connector, and a contact failure may occur.
To prevent a failure, take the following notes into a consideration during mechanism design.

[Caution]
-Avoid applying forces to/pulling the FPC along/perpendicular to the direction of FPC insertion.(Example32)
Avoid pushing/puling the FPC upwards/downwards.(Example34)
-If the FPC has to be curled/bended in your cabling design,
please keep enough degree of freedom in your design to keep the FPC tension free.
In this regard,the stiffener is parallel to the PCB.(Example33)
-During FPC wiring ,ensure that stress is not applied directly to the connector.
Do not bend the FPC excessively near the connector during use ,or it may cause contact failure or FPC breakage.
Stabilizing the FPC is recommended.(Example34)
-Do not mount other components underneath the FPC stiffener which may interfere with the connection.(Example35)
-Please consult with the FPC manufacturer about FPC bending performance and wire breakage strength
while making design.
-Keep sufficient operating space for FPC insertion during layout design in order to avoid incorrect FPC insertion.
Please keep enough FPC length and component layout space for assembly during design process.
FPC with too short length may make the assembly difficult.
-Keep enough space for the rotation of the actuator during PCB and component layout design.
-Please consult with our sales representative if you are using FPC with different configuration from our recommendation.

Example32

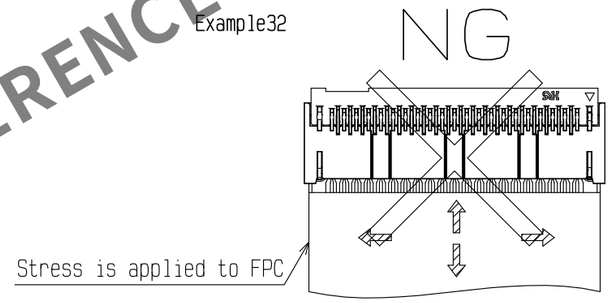

Example33

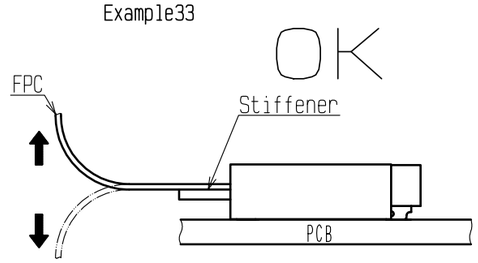

Example34

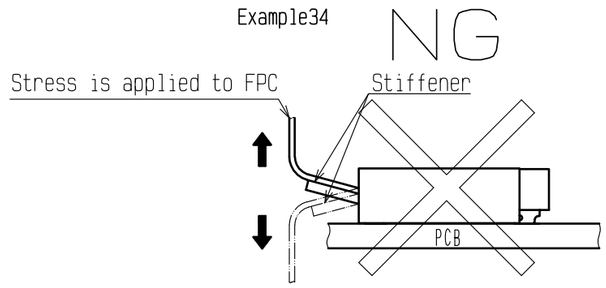

Example35

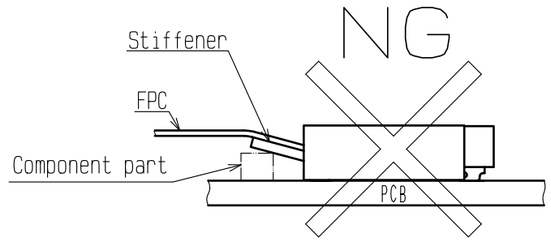

HRS DRAWING FOR REFERENCE

<INSTRUCTION MANUAL(4)>

HRS	DRAWING NO.	EDC-403028-00-00
	PART NO.	FH58SA-61S-0.2SHW
	CODE NO.	CL0580-3835-0-00

Jul.1.2025 Copyright 2025 HIROSE ELECTRIC CO., LTD. All Rights Reserved.
In case of consideration for using Automotive equipment / device which demand high reliability, kindly contact our sales window correspondents.

[Instructions for mounting on the PCB]

Follow the instructions shown below when mounting on the PCB.

[Caution]
- Refer to recommended layouts on the page 1 for PCB and stencil pattern.
- Using either narrower land pattern or wider stencil pattern than recommendation may end up with excessive amount of solder/flux climbing on contact. Please inspect the size of solder fillet and flux climbing height of the mounted connector while using different land/stencil pattern from our recommendation.
- Clearance between the mounting surface of the connecter contact leads and the bottom of the housing is very small. Solder resist/silk screening applied underneath the connector may interfere with the connector. This may lead to soldering defect/insufficient fillet formation. Please verify your solder resist/silk screening design carefully before implementing the design.
- Please try to minimize the warpage of the PCB. Soldering failure could still occur due to the PCB warpage even if the coplanarity of the connector is under 0.1mm.
- If the connector is mounting on FPC, please make sure to put a stiffener on the backside of the FPC. Recommended stiffner: Glass epoxy material with thickness of 0.3mm MIN.
- Do not apply 0.5N or greater external force on the connector when unreeling or handling the connector before mounting. Excessive mechanical stress may damage the connector before mounting.
- Apply reflow temperature profile within the specified conditions. For specific applications, the recommended temperature may vary depending on type/ volume/thickness of solder paste and size/thickness of PCB. Please consult with your solder paste and equipment manufacturer for specific recommendations. The temperatures mentioned below refer to the PCB surface temperature near the connector contact leads.
  - Reflow method:IR reflow
  - Number of reflow cycles:2 cycles MAX.

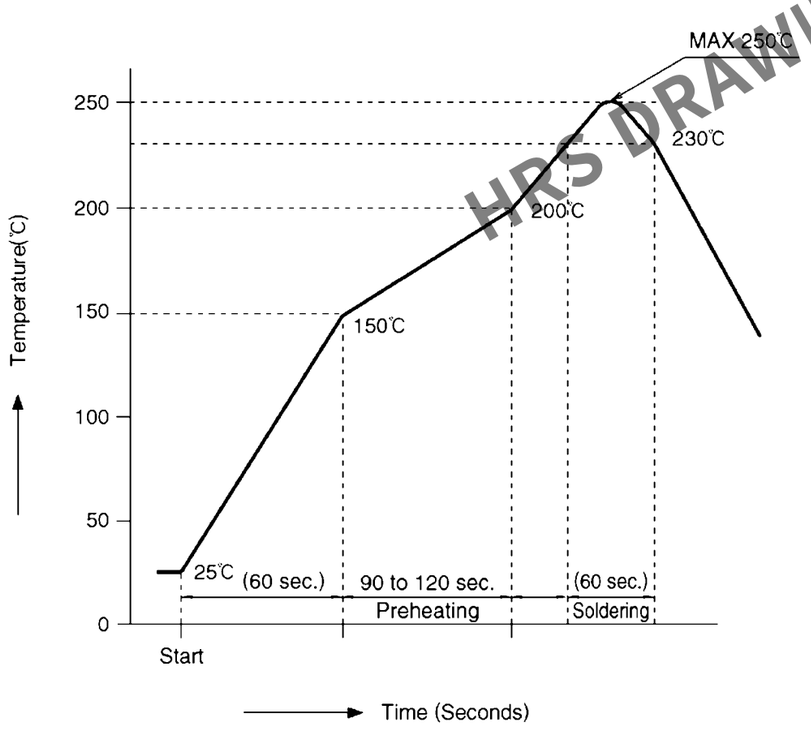

[Instructions for PCB handling after mounting the connector]

Follow the instructions shown below when mounting on the PCB.

[Caution]
- ·Splitting a large PCB into several pieces
  ·Installing mounting screw on PCB
  During the assembly processes decribed above, care shall be taken so as not to give any stresses of deflection or twisting to the PCB. Stresses applied on PCB may damage the connector as well.
- The warpage of a 100 mm wide PCB should remain within 0.5mm.(example36) The warpage of PCB may apply excessive stress on the connector and damage the connector.

Example 36

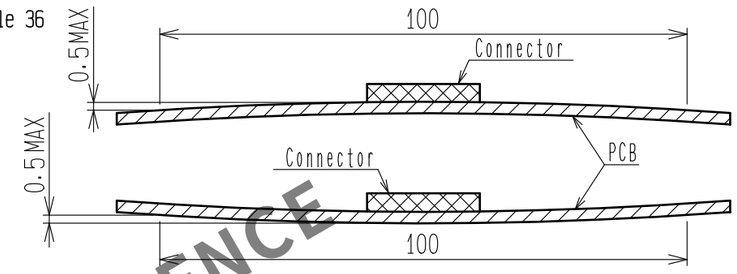

[Instructions on manual soldering]

Follow the instructions shown below when soldering the connector manually during repair work, etc.

[Caution]
- Do not perform manual soldering with the FPC inserted into the connector.
- Do not heat the connector excessively. Be very careful not to let the soldering iron contact any parts other than connector leads. Otherwise, the connector may be deformed or melt.
- Do not supply excessive solder (or flux). If excessive solder (or flux) is supplied on the contact lead, solder or flux may adhere to the contact point or rotating parts of the actuator, resulting in conduction or rotation failure of the actuator. Supplying excessive solder to the chucking metals may hinder actuator rotation, resulting in breakage of the connector.

[Others]

- Attachment of foreign particles with the connector contact may lead to conduction failure. In this particular case, the conduction failure may be fixed by re-inserting the FPC.
- Please perform conduction check with caution.Conductivity probe may damage the connector contacts.(Example37)

Example 37

NG

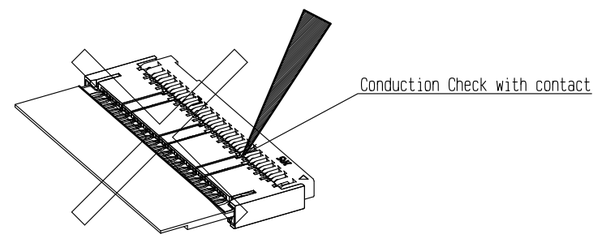

- Incorrect operation -

HRS DRAWING FOR REFERENCE

<INSTRUCTION MANUAL(5)>

DRAWING NO.	EDC-403028-00-00
PART NO.	FH58SA-61S-0.2SHW
CODE NO.	CL0580-3835-0-00

0 8/8