Mar.1.2024 Copyright 2024 HIROSE ELECTRIC CO., LTD. All Rights Reserved.
In case of consideration for using Automotive equipment / device which demand high reliability, kindly contact our sales window correspondents.

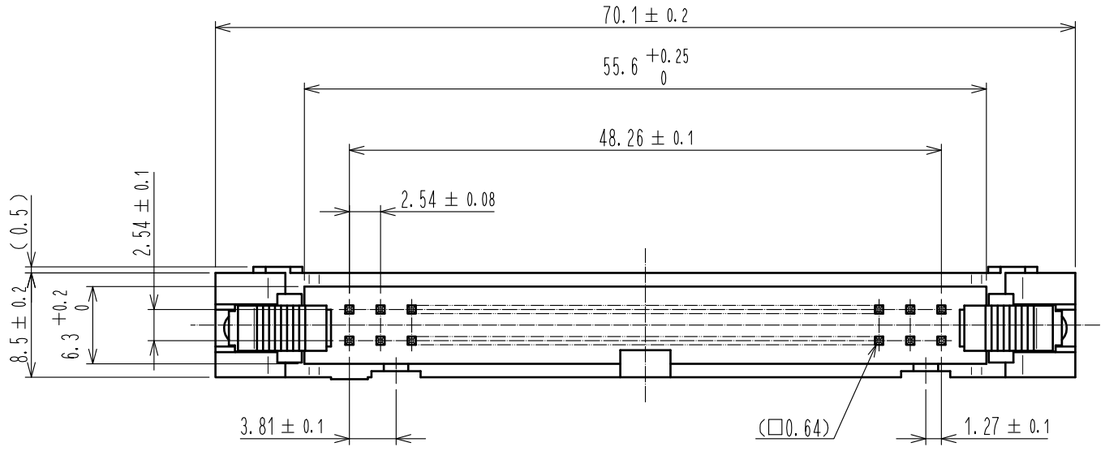

Recommended PC board hole pattern

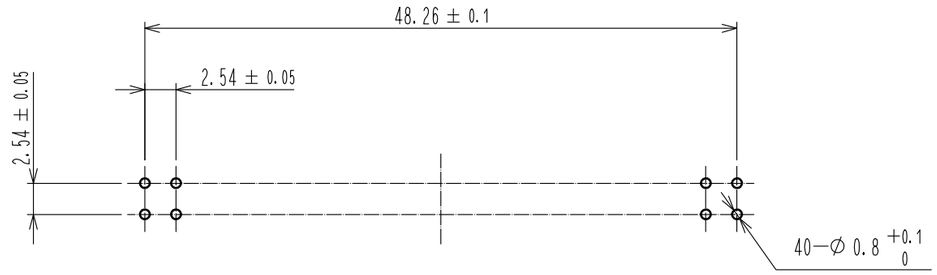

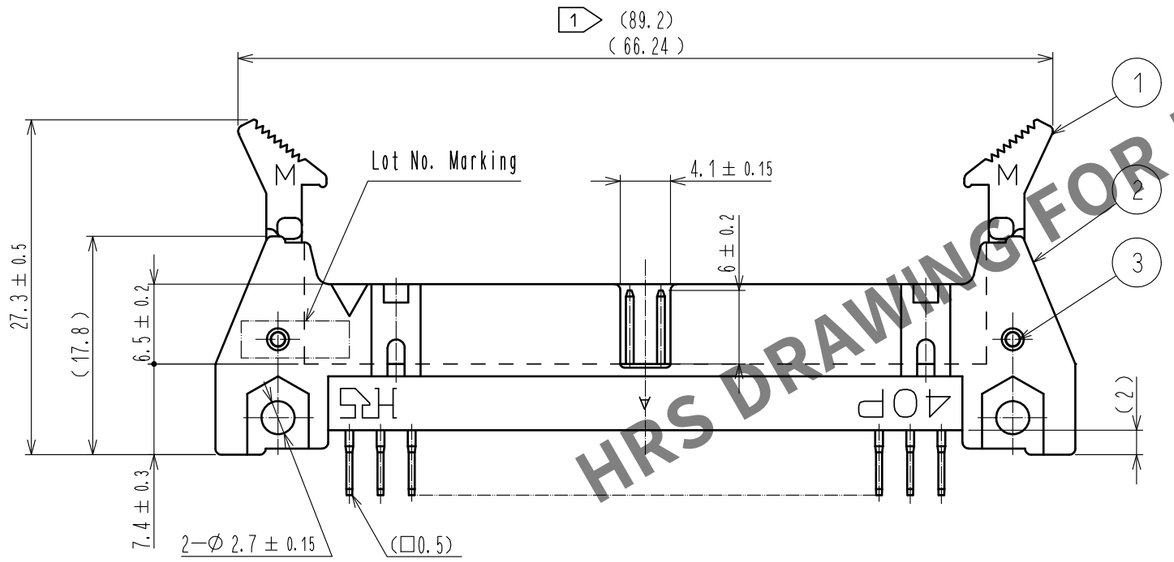

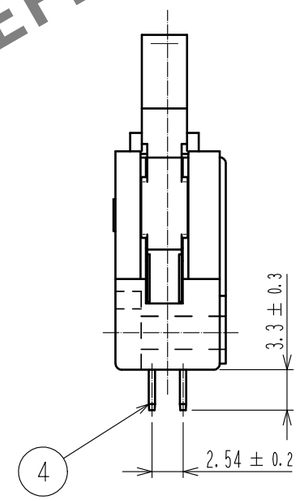

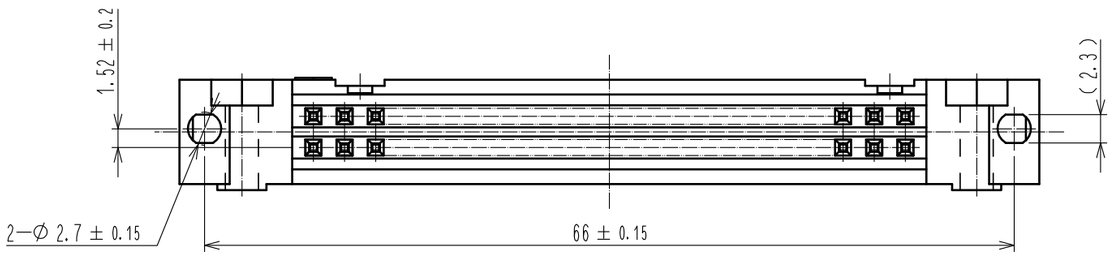

HRS DRAWING FOR REFERENCE

Notes 1 The upper dimension shows when the lock open out.
2 The dimensions in parentheses are for reference.
△1 3 UL(File No.E52653) authorization article.

NO.	MATERIAL	FINISH , REMARKS	NO.	MATERIAL	FINISH , REMARKS
3	STAINLESS		4	BRASS	Contact area : Gold 0.2μm min.
2	PBT	BLACK UL94V-0			Dip area : TIN-Plating 2μm min.
1	PBT	BLACK UL94V-0			Under plating : Nickel 2.5μm min.

UNITS	SCALE		COUNT	DESCRIPTION OF REVISIONS	DESIGNED	CHECKED	DATE
mm	2 : 1	△1	1	DIS-F-00005931	AK. IWAHORI	HT. YAMAGUCHI	20200309

HRS HIROSE ELECTRIC CO., LTD.

APPROVED	: HT. YAMAGUCHI	20181210	DRAWING NO.	EDC-018951-63-00
CHECKED	: HT. YAMAGUCHI	20181210	PART NO.	HIF3CA-40PA-2.54DSA(63)
DESIGNED	: HR. NAGAYASU	20181207		
DRAWN	: TS. HORI	20181207	CODE NO.	CL610-0708-0-63 △1 1/1

FORM HC0011-5-7