Apr.1.2024 Copyright 2024 HIROSE ELECTRIC CO., LTD. All Rights Reserved.
In case of consideration for using Automotive equipment / device which demand high reliability, kindly contact our sales window correspondents.

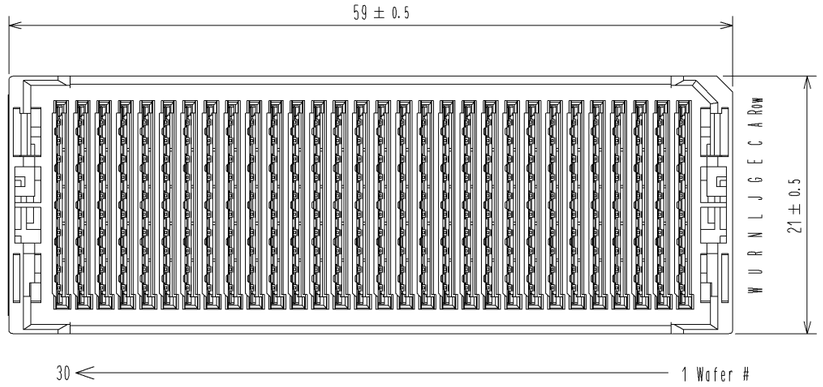

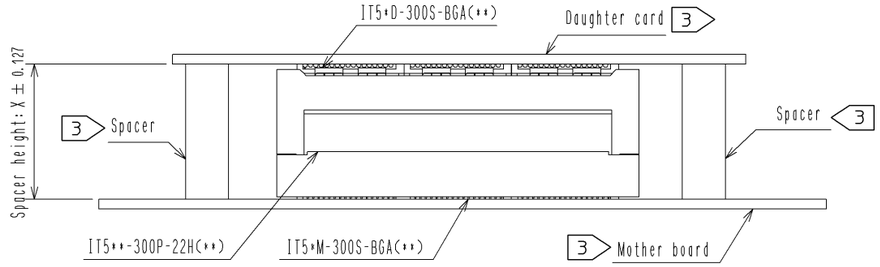

Figure1 Mated condition

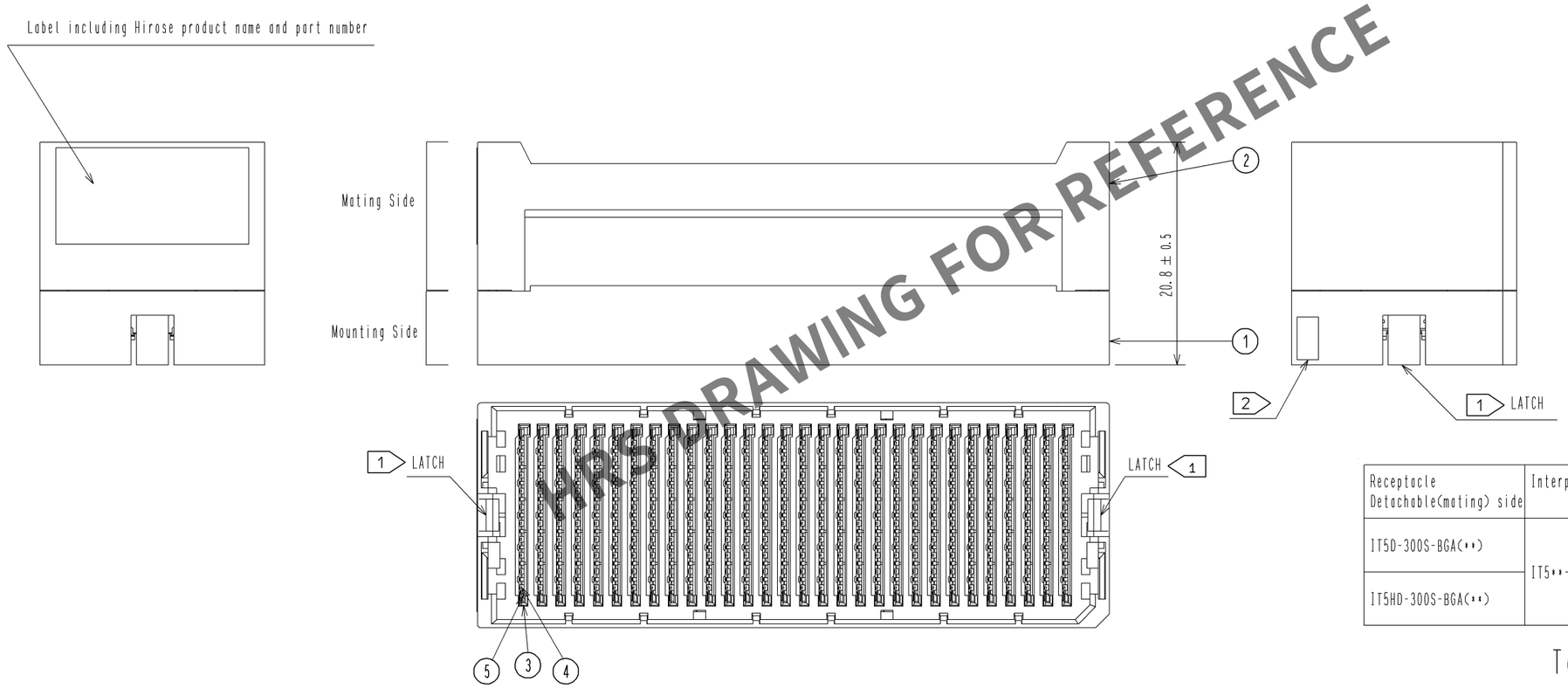

HRS DRAWING FOR REFERENCE

Receptacle Detachable(mating) side	Interposer	Receptacle Mounting side	Spacer height (X)
IT5D-300S-BGA(**)	IT5**-300P-22H(**)	IT5M-300S-BGA(**)	22
		IT5HM-300S-BGA(**)	23
IT5HD-300S-BGA(**)		IT5M-300S-BGA(**)	
		IT5HM-300S-BGA(**)	24

Table1 Spacer height

NOTE.
1. Mounting side is mated with the receptacle:IT5*M-300S-BGA(**) and fixed with the latch.
2. Lot No. shall be marked on the indicated position.
3. The indicated mother board and daughter card shall be fastened to the additional reinforcements to prevent the stress on IT5**-300S-BGA(**) solder joints.
4. Please refer to HIROSE document: ETAD-F0584 'IT5 design guideline'.
5. This product consists of 300 signal lines.
6. 30pcs of this products are packed in a soft tray.
7. Standard package of 60pcs are packaged in a carton box.
8. Please contact Hirose regarding pin assignment for single-ended signal transmission at the pairs used for differencial signal transmission.

NO.	MATERIAL	FINISH , REMARKS	NO.	MATERIAL	FINISH , REMARKS
3	LCP	BLACK, UL94V-0	5	Copper Alloy	Contact area:Nickel(1.5μm)+Gold(0.76μm) Other area :Nickel(1.5μm)
2	LCP	GRAY, UL94V-0	4	Copper Alloy	Contact area:Nickel(1.5μm)+Gold(0.76μm) Other area :Nickel(1.5μm)
1	PBT	BLACK, UL94V-0			

UNITS	SCALE	COUNT	DESCRIPTION OF REVISIONS	DESIGNED	CHECKED	DATE
mm	2 : 1					

HIROSE ELECTRIC CO., LTD.

APPROVED	: MK. EZAKI	13. 05. 21	DRAWING NO.	EDC3-341400-01
CHECED	: MK. EZAKI	13. 05. 21	PART NO.	IT5-300P-22H(03)
DESIGNED	: MK. NAGATA	13. 05. 21		
DRAWN	: MK. NAGATA	13. 05. 21	CODE NO.	CL636-1050-3-03 △ 1/2

Apr.1.2024 Copyright 2024 HIROSE ELECTRIC CO., LTD. All Rights Reserved.
In case of consideration for using Automotive equipment / device which demand high reliability, kindly contact our sales window correspondents.

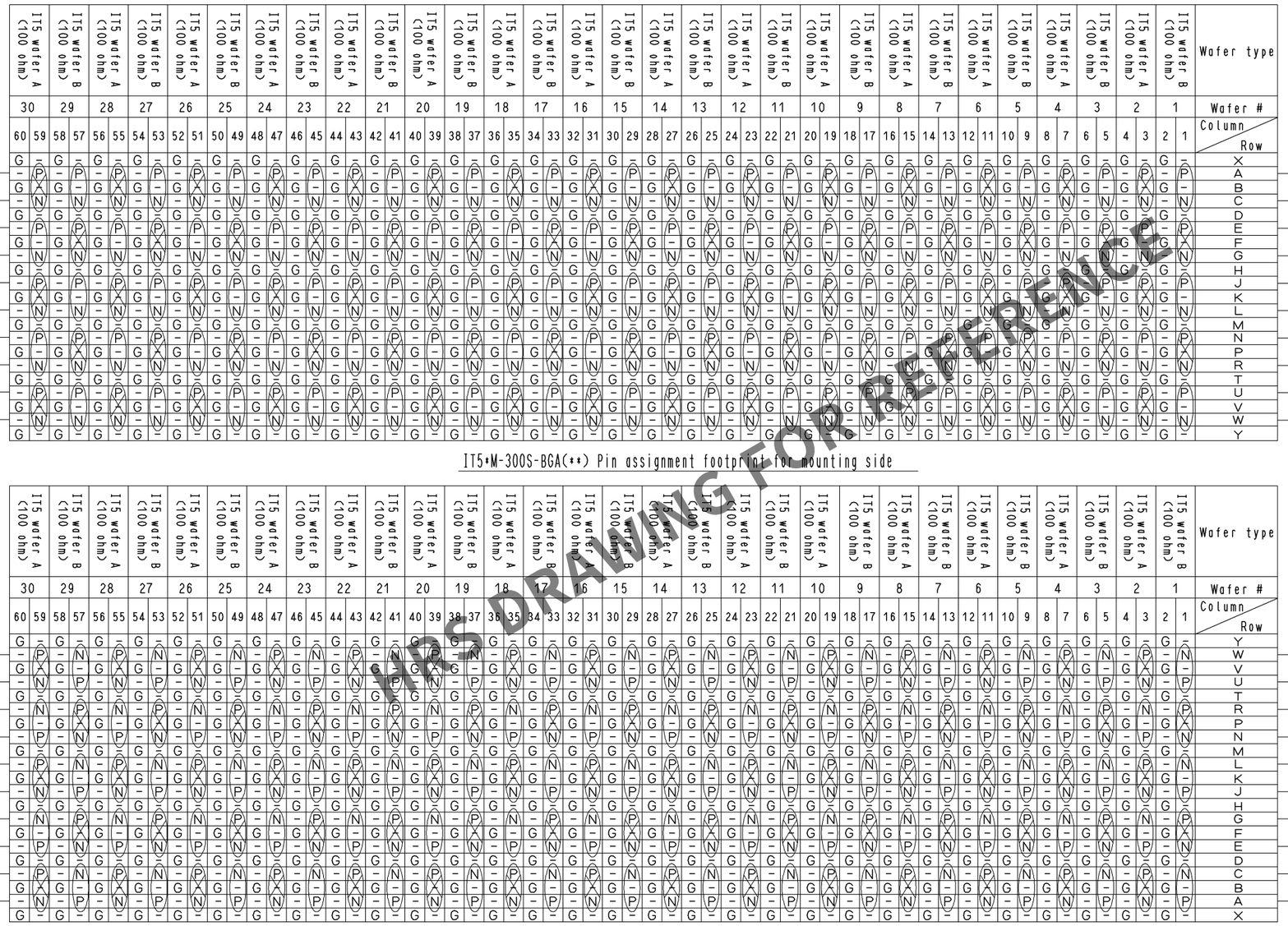

HRS DRAWING FOR REFERENCE

Symbols
S: Signal (Differential, Single-ended, Power)
G: GND, Power
P: Positive of differential pair
N: Negative of differential pair

8 (P X N) Twisted pair used for differential

8 (P - N) Non twisted pair used for differential

DRAWING NO.	EDC3-341400-01
PART NO.	IT5-300P-22H(03)
CODE NO.	CL636-1050-3-03

△ 2/2

FORM HC0011-5-8_AN