Apr.1.2024 Copyright 2024 HIROSE ELECTRIC CO., LTD. All Rights Reserved.
In case of consideration for using Automotive equipment / device which demand high reliability, kindly contact our sales window correspondents.

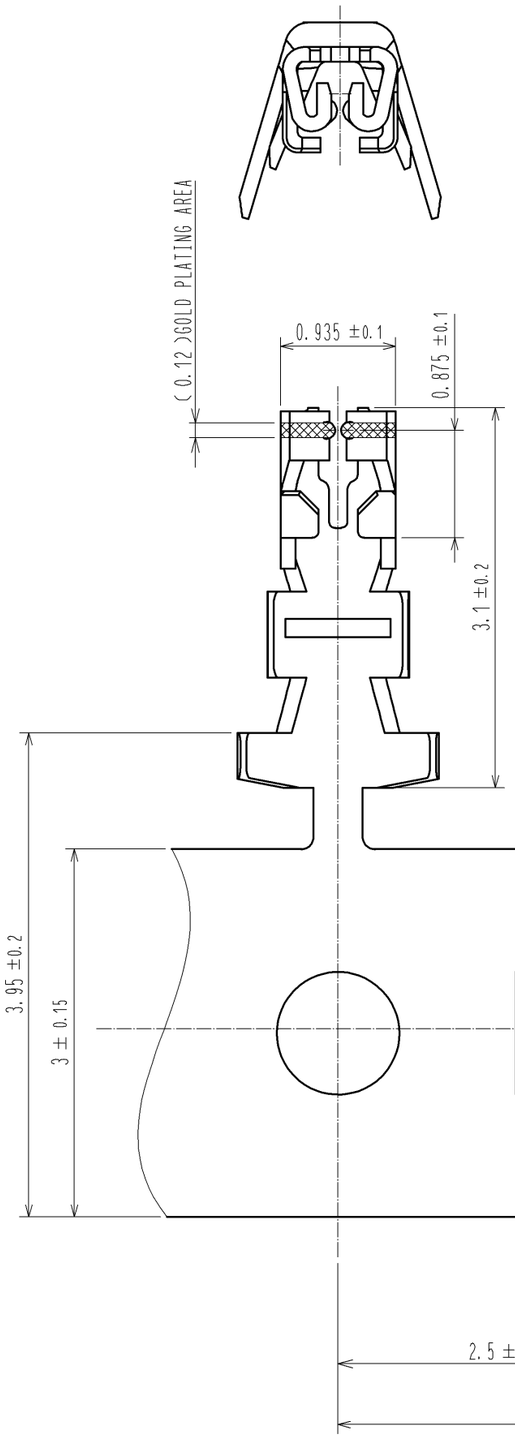

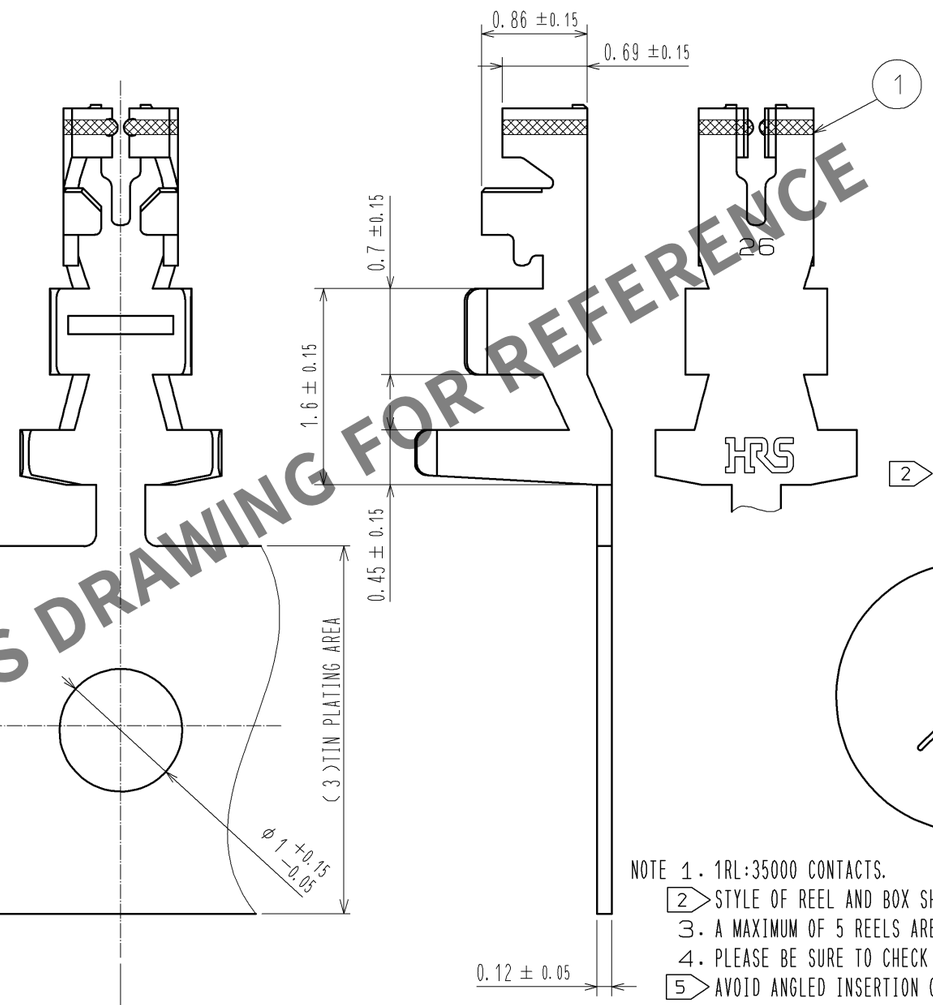

HRS DRAWING FOR REFERENCE

5 FIGURE OF INSERTION

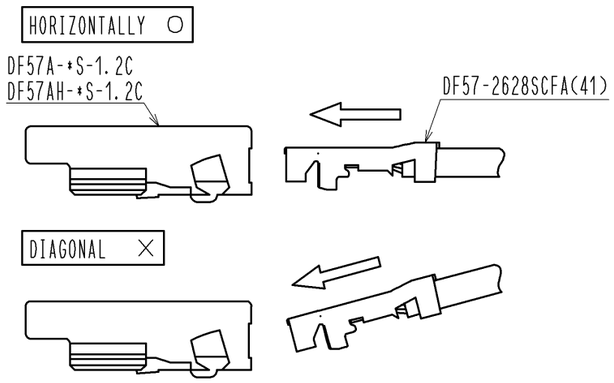

2 STYLE AND DIMENSION OF BOX

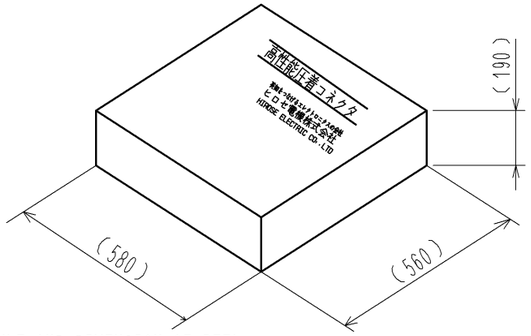

2 STYLE AND DIMENSION OF REEL

PART No. LABEL

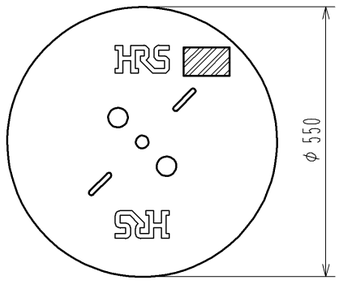

DETAIL OF PART No. LABEL

HRS		検査
品名コード	CL666-0033-0-41	
品名	DF57-2628SCFA(41)	
数量	35000	
仕様		
LOT No.		
継ぎ目		

SECTION
Lot No.
SPECIFICATION
QUANTITY
PART No.
CODE No.

NOTE 1. 1RL:35000 CONTACTS.
2 STYLE OF REEL AND BOX SHOWS IN FIGURE.
3. A MAXIMUM OF 5 REELS ARE PACKED UP IN ONE BOX.
4. PLEASE BE SURE TO CHECK THE FORM OF CRIMPING USING A CABLE. WHEN YOU ADJUST APPLICATOR.
5 AVOID ANGLED INSERTION OF CRIMP CONTACT(DF57-2628SCFA(41)) TO MAINTAIN PERFORMANCE RELIABILITY.

NO.	MATERIAL	FINISH , REMARKS	NO.	MATERIAL	FINISH , REMARKS
1	PHOSPHOR BRONZE	CONTACT AREA:GOLD PLATING 0.2μmMIN CARRIER AREA:TIN PLATING 1μmMIN UNDER AREA:NICKEL PLATING 2μmMIN			

UNITS	SCALE	COUNT	DESCRIPTION OF REVISIONS	DESIGNED	CHECKED	DATE
mm	20 : 1					

HRS HIROSE ELECTRIC CO., LTD.

APPROVED	: KI. AKIYAMA	12.11.17	DRAWING NO.	EDC3-342636-01
CHECKED	: HK. UMEHARA	12.11.17	PART NO.	DF57-2628SCFA(41)
DESIGNED	: TS. KUMAZAWA	12.11.16	CODE NO.	CL666-0033-0-41
DRAWN	: MI. SAKIMURA	12.11.15		1/1

FORM HC0011-5-7