Apr.1.2024 Copyright 2024 HIROSE ELECTRIC CO., LTD. All Rights Reserved.
In case of consideration for using Automotive equipment / device which demand high reliability, kindly contact our sales window correspondents.

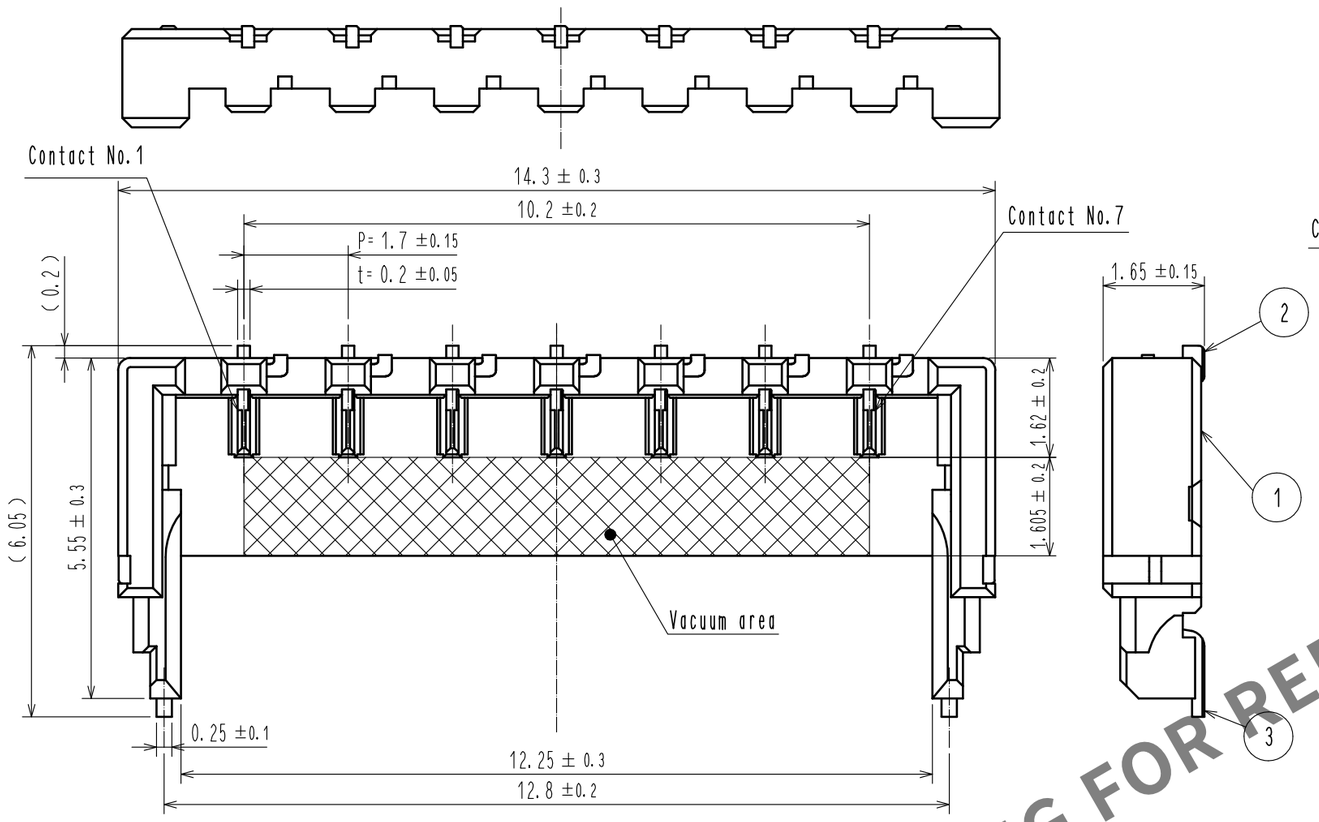

Recommended PCB layout (Mounting surface side)(Free)
Recommended metal mask (Free)
Thickness : 0.1mm

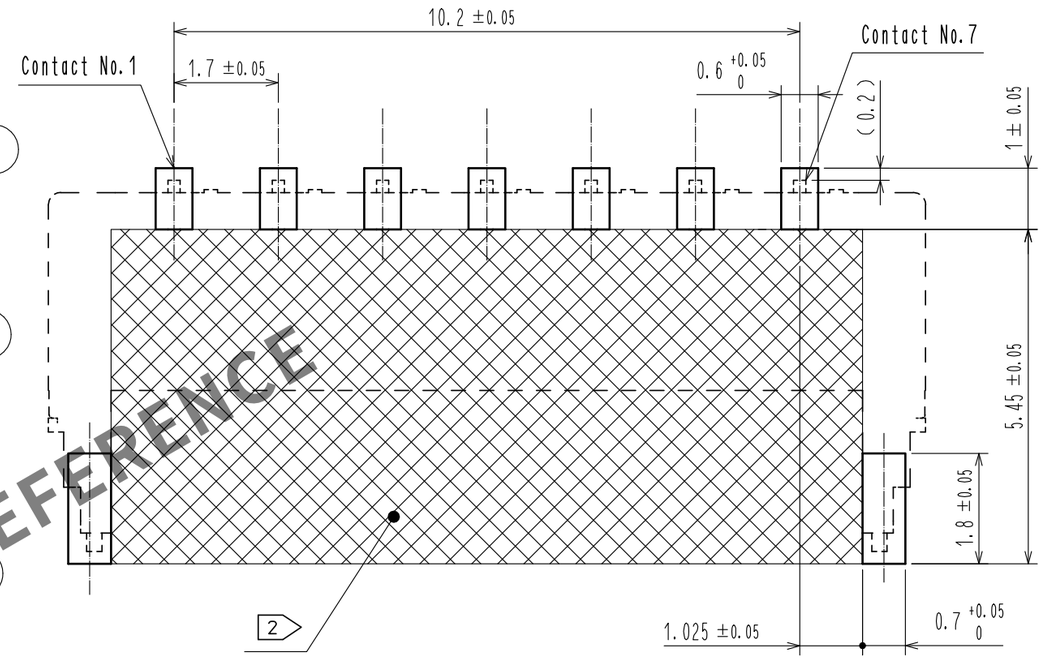

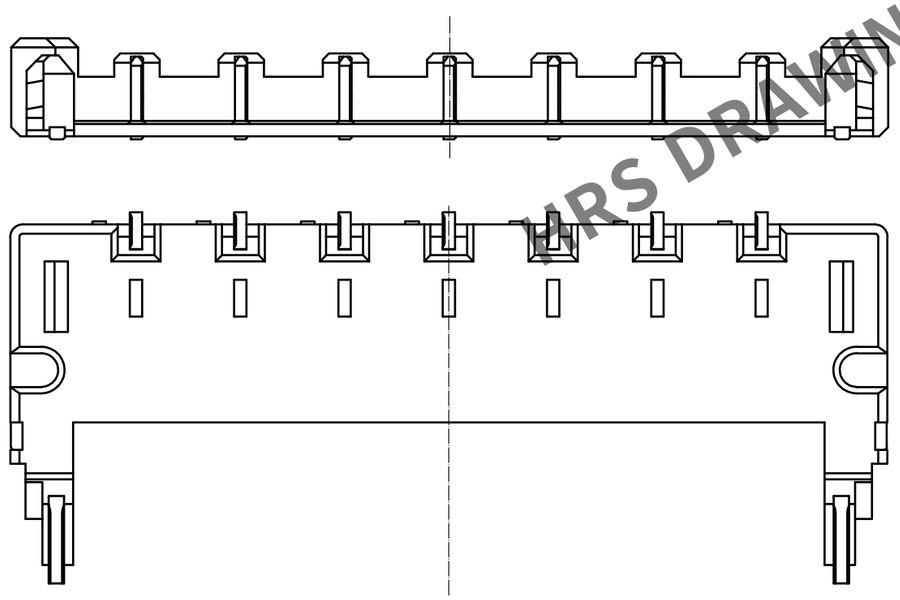

Mating figure (Free)

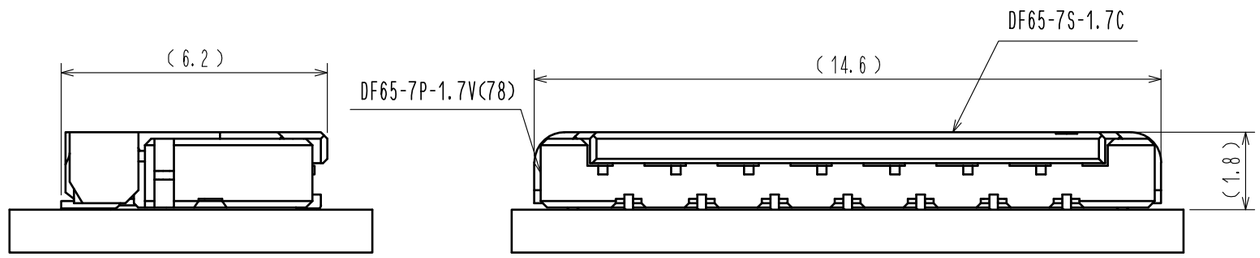

HRS DRAWING FOR REFERENCE

NO.	MATERIAL	FINISH , REMARKS	NO.	MATERIAL	FINISH , REMARKS
3	BRASS	Surface : Gold plating 0.05 μm MIN Under plating : Nickel plating 2.5 μm MIN			
2	BRASS	Surface : Gold plating 0.25 μm MIN Under plating : Nickel plating 2.5 μm MIN	6	PS	Reel , Black
			5	Polyester	Clear [Cover tape]
1	LCP	UL94V-0, Black	4	PS	Clear [Embossed carier tape]

Note 1. Lead Co-planarity shall be 0.1mm MAX
2 ▨ area indicated must be free of conductive traces or the conductive traces must be covered by resist film.
3. Please consult HIROSE when the product is mounted to FPC.

UNITS	SCALE	COUNT	DESCRIPTION OF REVISIONS	DESIGNED	CHECKED	DATE
mm	10 : 1	2 3	DIS-H-00004863	SN. MIWA	SZ. ONO	20190517

HRS HIROSE ELECTRIC CO., LTD.

APPROVED	: KI. AKIYAMA	20150825	DRAWING NO.	EDC-354319-78-00
CHECED	: TS. FUKUSHIMA	20150825	PART NO.	DF65-7P-1.7V(78)
DESIGNED	: YK. YAMAGUCHI	20150824	CODE NO.	CL666-6014-9-78
DRAWN	: MI. SAKIMURA	20150824		2 1/2

Apr.1.2024 Copyright 2024 HIROSE ELECTRIC CO., LTD. All Rights Reserved.
In case of consideration for using Automotive equipment / device which demand high reliability, kindly contact our sales window correspondents.

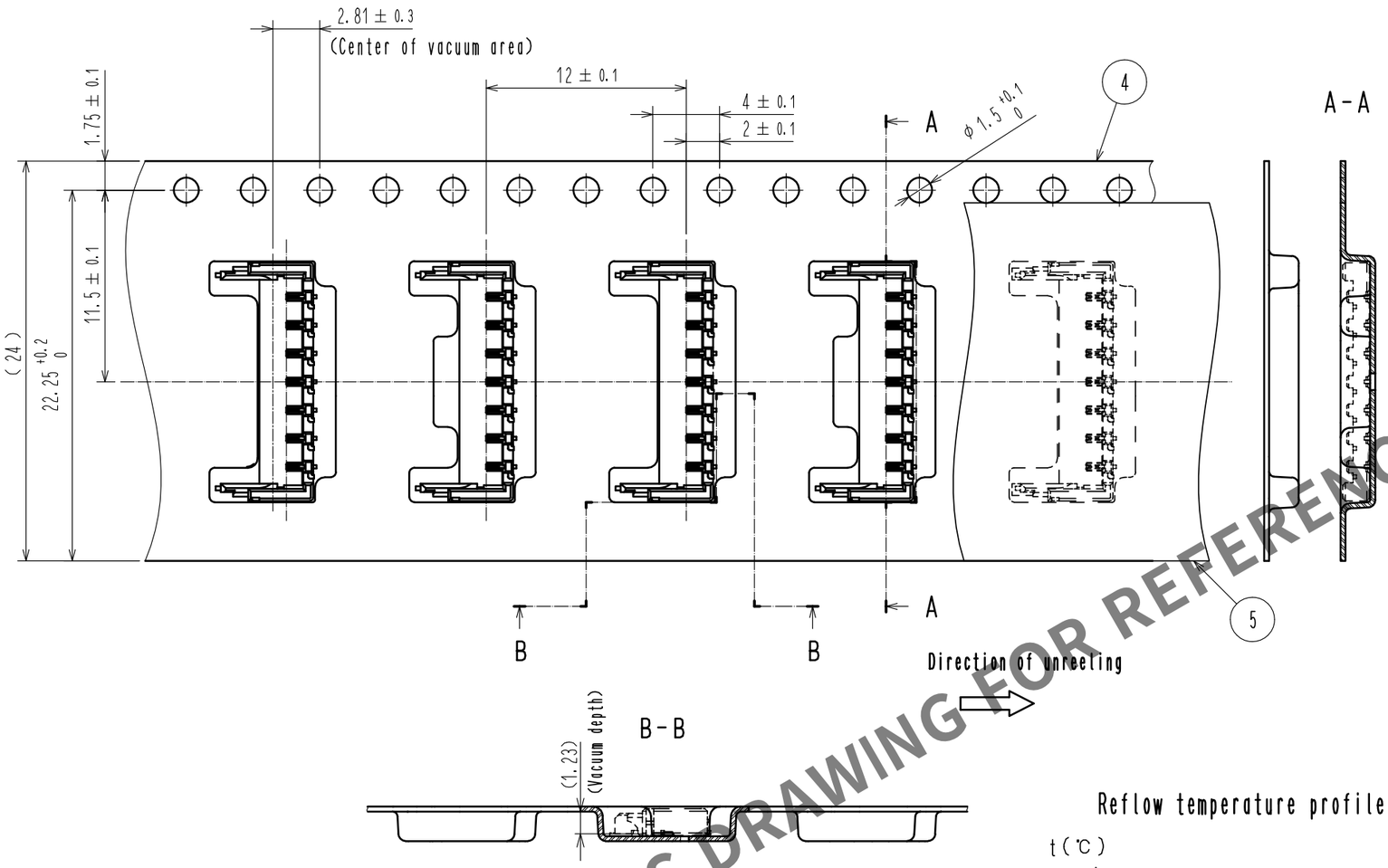

Style and dimension of reel (Free)

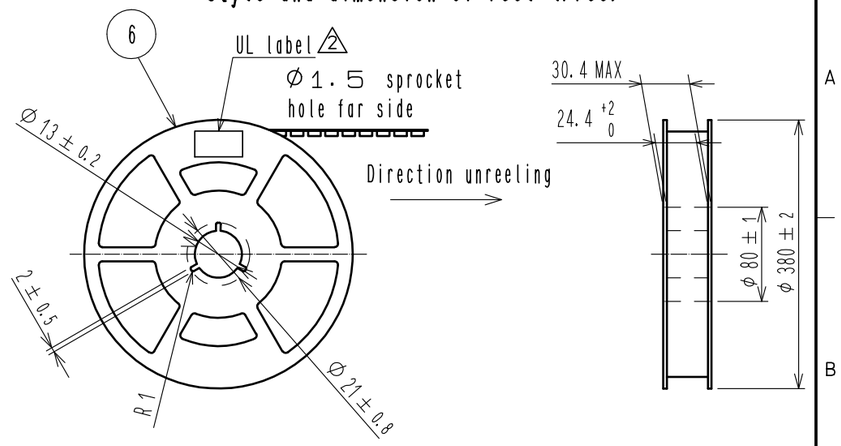

2 Detail of UL label

HIROSE ELECTRIC CO., LTD **

666-6014-9-78	
DF65-7P-1.7V(78)	
Quantity(数量)	4000 個
Lot No.(ロット番)	18.06.28
Operating Voltage	AC 50 V
Current Rating	3.5A

CAUTION:NOT FOR INTERRUPTING CURRENT.
FOR USE IN CLASS 2 CIRCUITS ONLY.
ATTENTION:NE PAS UTILISIER POUR COUPER LE COURANT
UTILISIER DANS LES CIRCUITS DE CLASSE 2 SEULEMENT.

HRS DRAWING FOR REFERENCE

Reflow temperature profile using lead-free solder paste (Reference)

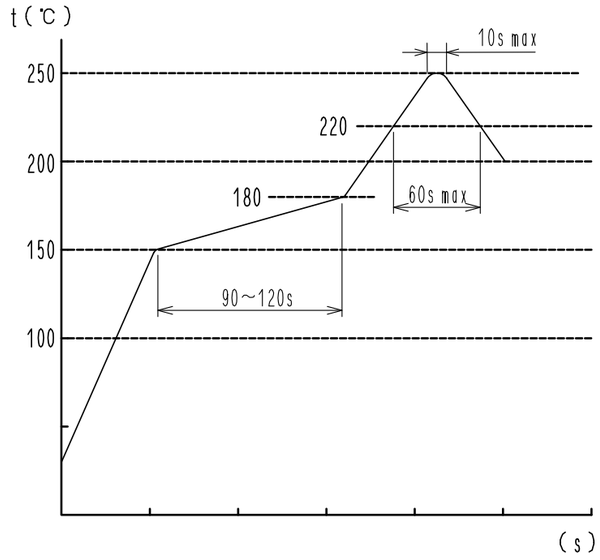

Number of reflow cycles 2 cycles MAX.
The temperature is measured in the terminal lead part.

Additional factors, such as solder paste type, PCB size and other mounted components could affect the profile. Therefore, a thorough evaluation of mounting condition is requied prior to production.

5 Taping (Free)

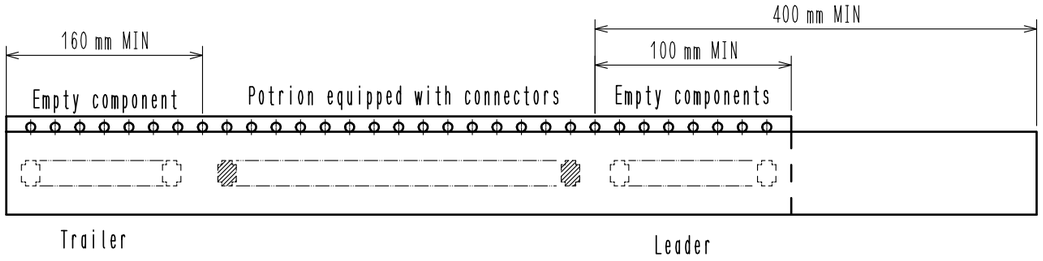

Note 4. 1 Reel : 4000 Connectors.
5 Refer to IEC 60286.(Packaging of components for automatic handling)
6. The dimensions in parenheses are for reference.
2 7. UL(File No.E52653),
C-UL(File No.E52653) authorization article.

DRAWING NO.	EDC-354319-78-00
PART NO.	DF65-7P-1.7V(78)
CODE NO.	CL666-6014-9-78

1 2/2